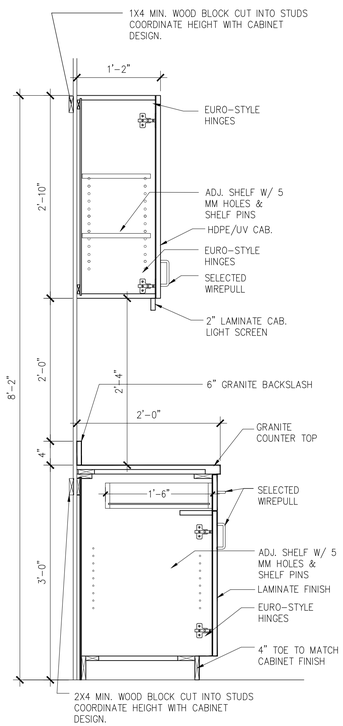

1 A7.0 CASEWORK DETAILS

SCALE: 1" = 1'-0"

NOTE:
CONTRACTOR TO PROVIDE DETAILED MILLWORK SHOP DRAWINGS FOR ARCHITECT AND OWNER APPROVAL PRIOR TO PROCUREMENT AND INSTALLATION. MILLWORK DRAWINGS ARE CONCEPTUAL, MODIFICATIONS AND ADJUSTMENTS CAN BE PROPOSED FOR REVIEW AND APPROVAL. MILLWORK VENDOR TO VERIFY ALL ON SITE AS-BUILT ROUGH OPENINGS PRIOR TO FABRICATION.

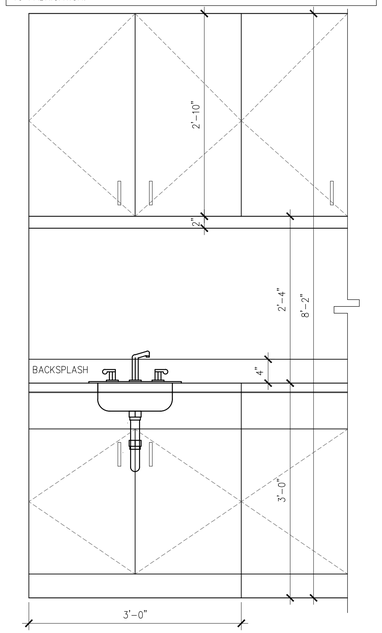

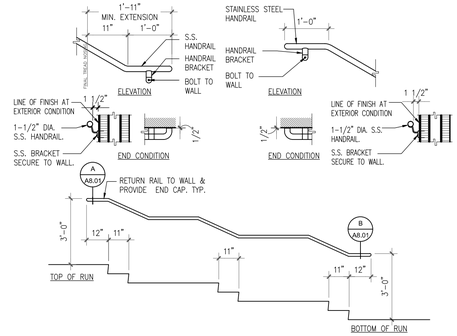

2 A7.0 RAILING DETAIL-SECTION

SCALE: 3" = 1'-0"

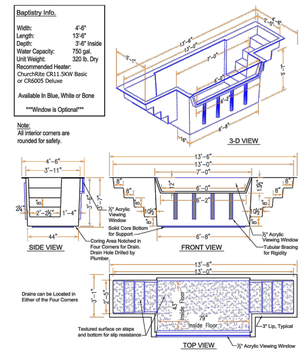

3 A7.0 BAPTISTRY DETAIL

SCALE: NTS

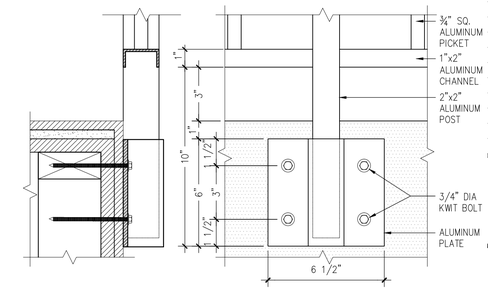

4 A7.0 RAILING DETAIL-SECTION

SCALE: 3/4" = 1'-0"

REVISIONS

1.
2.
3.
4.
5.
6.
7.
8.
9.
10.

ALL IDEAS, DESIGNS, ARRANGEMENTS, AND PLANS INDICATED OR REPRESENTED BY THIS DRAWING ARE OWNED BY AND PROPERTY OF THIS OFFICE, AND WHERE CREATED, EVOLVED, AND DEVELOPED FOR USE ON, AND IN CONNECTION WITH THE SPECIFIED PROJECT. NONE OF SUCH IDEAS, DESIGNS, ARRANGEMENTS, AND PLANS SHALL BE USED BY, OR DISCLOSED TO ANY PERSON, FIRM, OR CORPORATION FOR ANY PURPOSE WITHOUT WRITTEN PERMISSION OF RWB / LINARES ARCHITECTURE, INC.

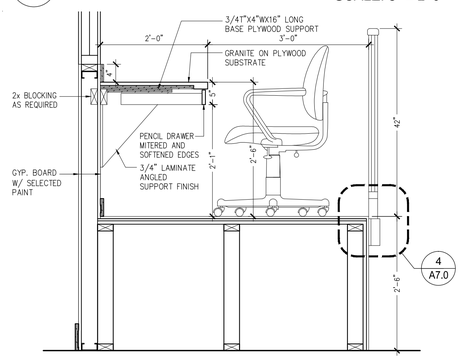

5 A7.0 COUNTER DETAIL

SCALE: 3/4" = 1'-0"

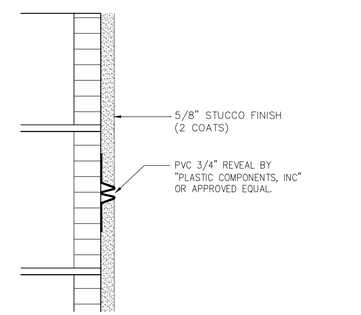

6 A7.0 STUCCO CONTROL LINE or SCORE LINE DTL.

SCALE: 3" = 1'-0"

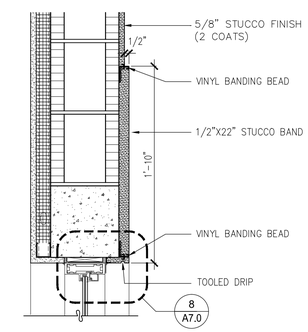

7 A7.0 STUCCO BAND DETAIL

SCALE: 1 1/2" = 1'-0"

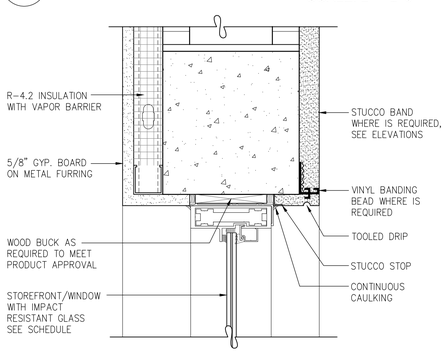

8 A7.0 STOREFRONT HEAD DETAIL

SCALE: 3" = 1'-0"

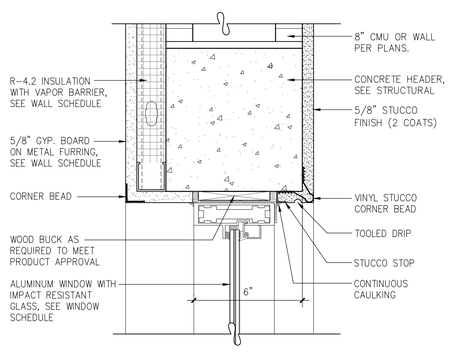

9 A7.0 EXTERIOR WINDOW HEAD DETAIL

SCALE: 3" = 1'-0"

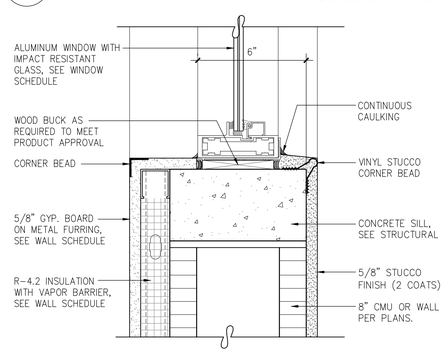

10 A7.0 EXTERIOR WINDOW SILL DETAIL

SCALE: 3" = 1'-0"

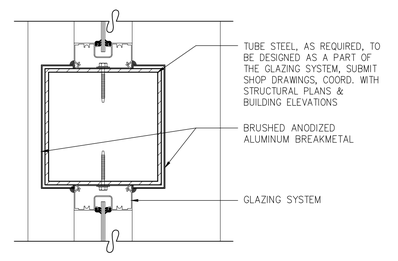

11 A7.0 TUBE STEEL DETAIL

SCALE: 3" = 1'-0"

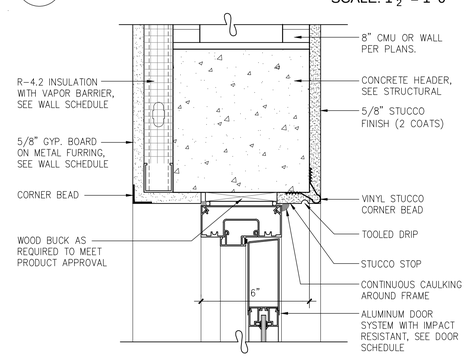

12 A7.0 EXTERIOR DOOR HEAD DETAIL

SCALE: 3" = 1'-0"

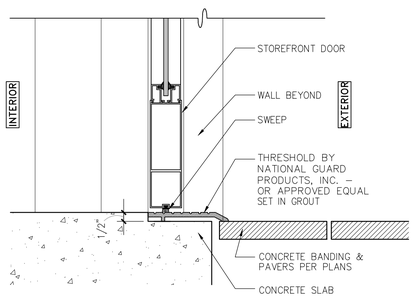

13 A7.0 EXTERIOR DOOR THRSH. DTL.

SCALE: 3" = 1'-0"

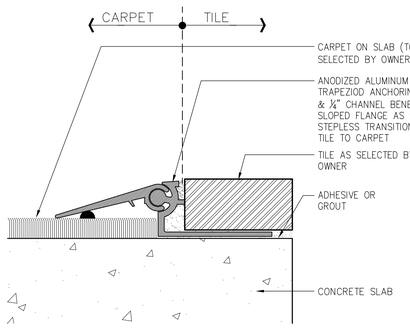

14 A7.0 TRANSITION DETAIL

SCALE: 6" = 1'-0"

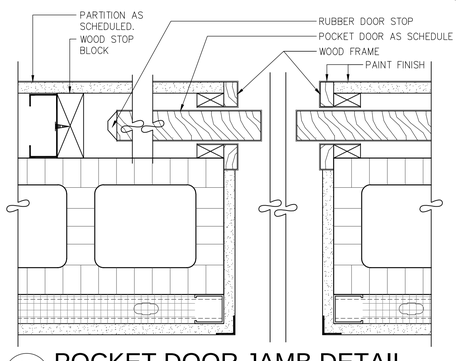

15 A7.0 POCKET DOOR JAMB DETAIL

SCALE: 3" = 1'-0"

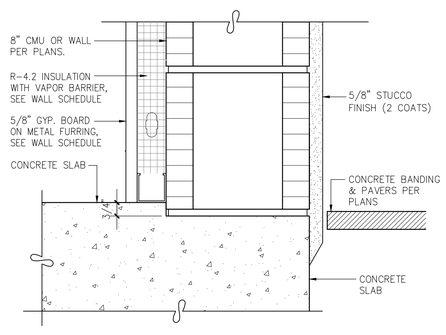

16 A7.0 TYP. SLAB RECESS

SCALE: 3" = 1'-0"

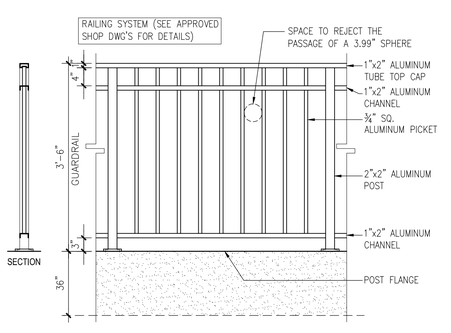

17 A7.0 RAILING DETAIL

SCALE: 3/4" = 1'-0"

LIFE FELLOWSHIP
11401 WEST SAMPLE ROAD
CORAL SPRINGS, FL. 33065

1600 SOUTH DIXIE HWY., SUITE 400
BOCA RATON, FLORIDA 33432
PHONE 561-391-0081 FAX 561-391-0085
EMAIL mail@rwb-arch.com

RWB Linares ARCHITECTURE

PROJECT # 14-067
DATE 05-19-16
SHEET # A7.0

JUAN C. LINARES
AA26000640