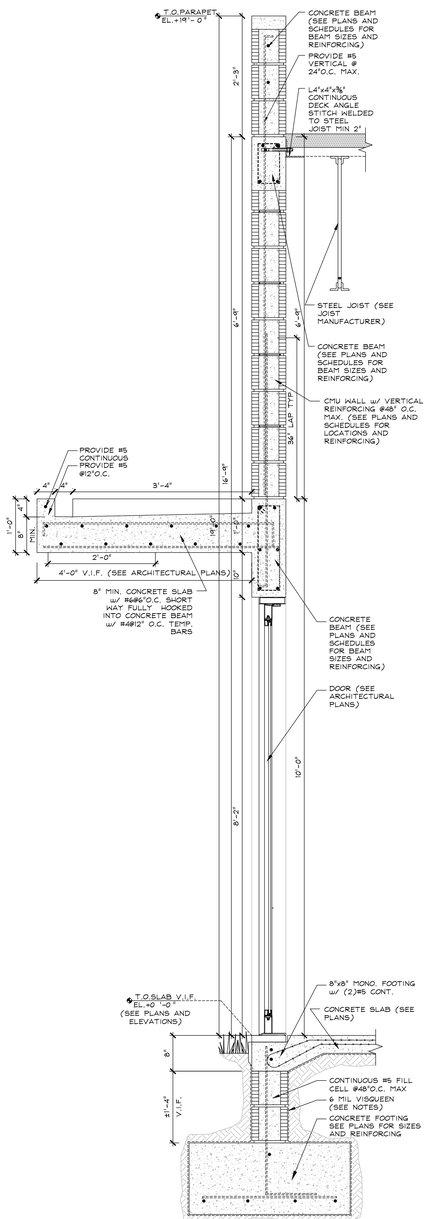

WALL SECTION DETAIL 5/S6.2
SCALE 1" = 1'-0"

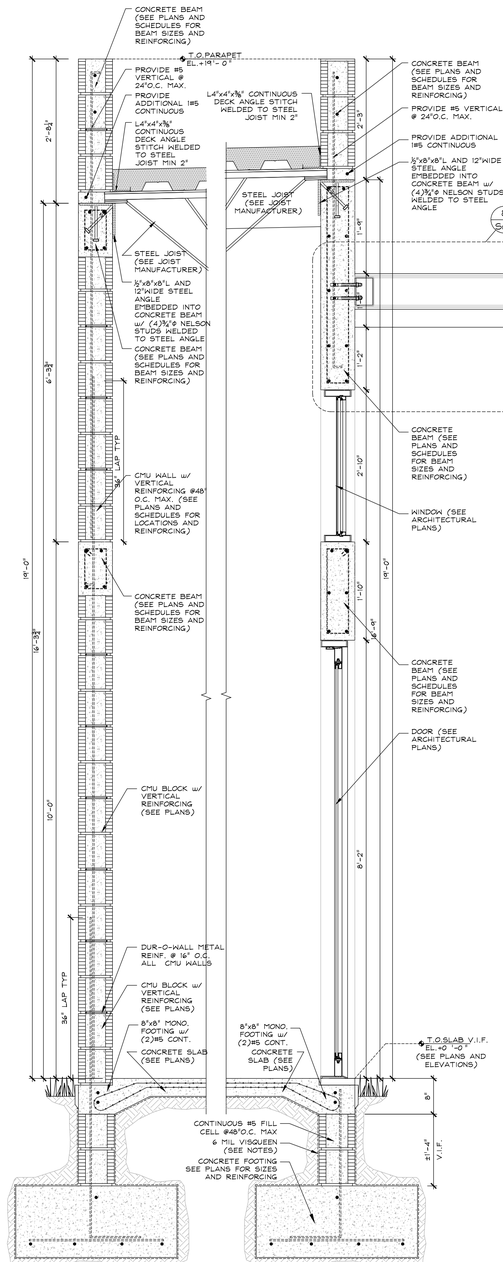

WALL SECTION DETAIL 4/S6.2
SCALE 1" = 1'-0"

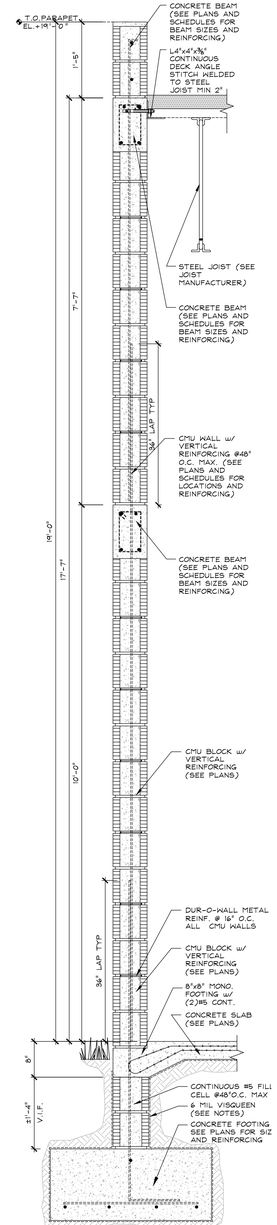

WALL SECTION DETAIL 3/S6.2
SCALE 1" = 1'-0"

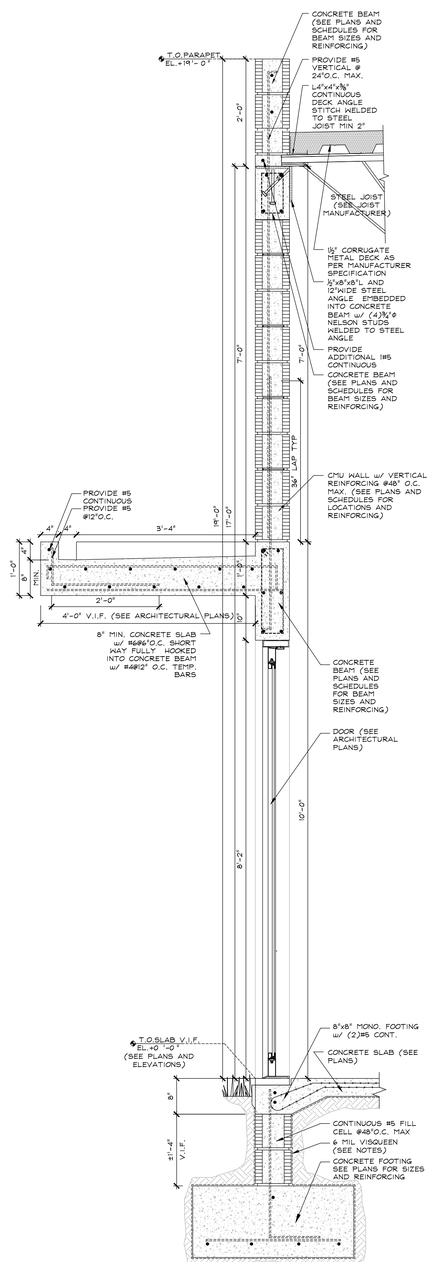

WALL SECTION DETAIL 2/S6.2
SCALE 1" = 1'-0"

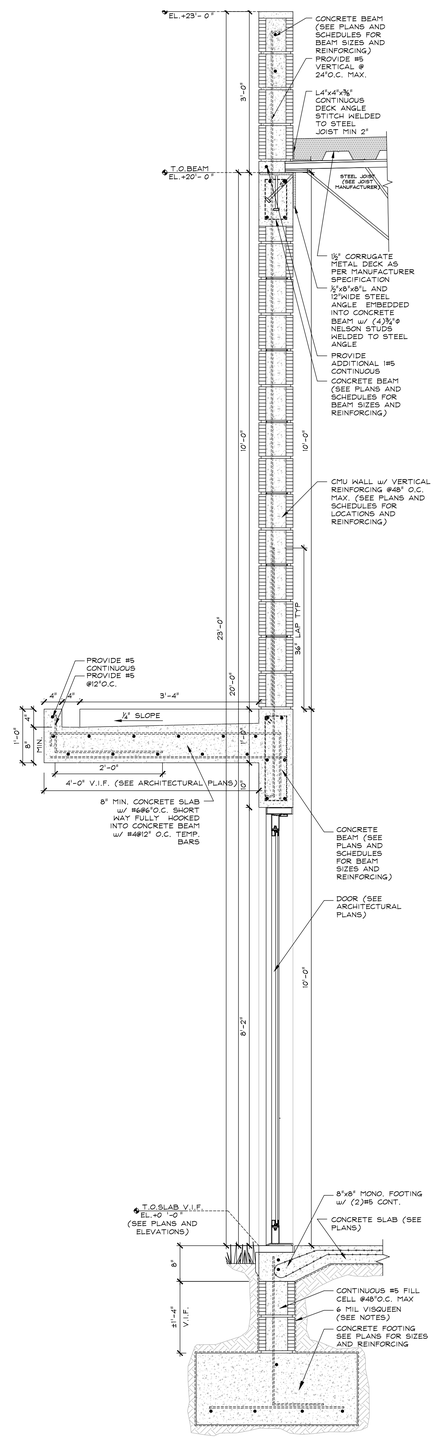

WALL SECTION DETAIL 1/S6.2
SCALE 1" = 1'-0"

REVISIONS

1.
2.
3.
4.
5.
6.
7.
8.
9.
10.

ALL IDEAS, DESIGNS, ARRANGEMENTS, AND PLANS INDICATED OR REPRESENTED BY THIS DRAWING ARE OWNED BY AND PROPERTY OF THIS OFFICE, AND WHERE CREATED, EVOLVED, AND DEVELOPED FOR USE ON, AND IN CONNECTION WITH THE SPECIFIED PROJECT. NONE OF SUCH IDEAS, DESIGNS, ARRANGEMENTS, AND PLANS SHALL BE USED BY, OR DISCLOSED TO ANY PERSON, FIRM, OR CORPORATION FOR ANY PURPOSE WITHOUT WRITTEN PERMISSION OF RWB+LINARES ARCHITECTURE, INC.

LIFE FELLOWSHIP
11401 WEST SAMPLE ROAD
CORAL SPRINGS, FL. 33065

1600 SOUTH DIXIE HWY., SUITE 400
BOCA RATON, FLORIDA 33432
PHONE 561-391-0081 FAX 561-391-0055
EMAIL mail@rwb-arch.com

RWB Linares ARCHITECTURE

PROJECT #	14-067
PLOT DATE	04-20-16
DATE	10-20-14
SHEET #	

JUAN C. LINARES

Ali N. Yemenicier, P.E.
CERTIFICATE OF AUTHORIZATION # 8495
design engineering & supply, Inc.
Florida Reg. # 54723
2709 N.W. Boca Raton Blvd. Suite # 111 , Boca Raton, FL 33431
PHONE : (561)705-2930 FAX : (561)631-3211

S-6.2

AA26000640