WELLINGTON GREEN PARCEL "F"

PHASE II RETAIL "H" MODIFICATION

THE VILLAGE OF WELLINGTON, FLORIDA

OWNER:

WEINGARTEN REALTY
5355 TOWN CENTER ROAD, SUITE 802
BOCA RATON, FL 33486-1069
P (954) 351-7002 F (954) 351-7010

ARCHITECT :

WILLIAMSON DACAR ASSOCIATES INCORPORATED

MAIN OFFICE: 15500 Lightwave Drive, Suite 106, Clearwater, FL 33760 (727) 725-0951
BOCA RATON OFFICE: 6501 CONGRESS AVE. SUITE 100 BOCA RATON, FL 33487 (727) 725-0951
Architect: AA0002541 Engineering: EB 0006884

WDA Project No: 1526-01

100% Construction Documents - PERMIT SET
June 15, 2016

STRUCTURAL ENGINEERS:

Johnson Structural Group
3500 N.W. Boca Raton Blvd. Suite 618 Boca Raton, FL 33431
P: (561) 982-8999 F: (561) 982-8899

ELECTRICAL ENGINEERS:

project Caine, Inc.
1948 E Sunrise Blvd, Suite 1, Fort Lauderdale, FL 33304
P: (954) 767-8886 F: (954) 767-9934

CIVIL ENGINEERS:

Holland Engineering, Inc.
3900 Hollywood Blvd. Suite 303, Hollywood, FL 33021
P: (954) 367-0371 F: (954) 367 - 0372

LANDSCAPE ARCHITECT:

Wayne Villavaso Landscape Architecture, Inc.
268 Flamingo Drive, West Palm Beach. FL 33401
P: (561) 820-1556 F: (561) 833-6707

Architect: Williamson Dacar Associates, Inc.

Architect of Record: Date

NOTE:
TO THE BEST OF MY KNOWLEDGE, THESE DRAWINGS AND PROJECT MANUALS ARE COMPLETE AND COMPLY WITH THE FLORIDA BUILDING CODE FIFTH EDITION 2014.

GENERAL NOTE:

THE TABULAR DATA SHOWN ON THIS SHEET IS FROM THE PLAN TITLED "WELLINGTON GREEN PARCEL 'F' THE VILLAGE OF WELLINGTON, FLORIDA (PETITION # 10000-012 ASA 46) DATED 03.03.17 MARC WIENER, AIA ARCHITECTURE / PLANNING. REVISION 3 & CERTIFIED DATE SEPTEMBER 23, 2009" WITH THE PROPOSED REVISIONS FOR RETAIL H INDICATED BY REVISION NUMBER 1 MARK.

1 / A01 OVERALL SITE PLAN
SCALE: 1" = 100'-0"

WELLINGTON GREEN PARCEL "F" PHASE II "H" MODIFICATION

TABULAR DATA

PETITION NUMBER	*(2000-12 SP 13)
PROPOSED USES	RETAIL / BANK / OFFICE
FUTURE LAND USE	LR-1/MU OVERLAY (CH)
ZONING	MUPD
SECTION/TOWNSHIP/RANGE	9/43/T44/R41
OVERLAY DISTRICT	DRI
TRAFFIC ANALYSIS ZONE	136

	SF	AC	% OF SITE
GROSS SITE AREA	1,556,617	35.74	
WATER MANAGEMENT TRACT	326,814	4.75	
OP F1	81,634	1.87	
OP F2	78,569	1.80	
OP F3	56,950	1.31	
NET SITE AREA	1,132,630	26.00	100%
USE SQUARE FOOT ANALYSIS			
TOTAL BUILDING (SF GFA)	128,411	GFA	11.02%
OTHER USES OTHER USES (MECHANICAL, MEZZANINE, METER RMS, MAINT RM.)	815	0.02	0.0%
TOTAL USES SF (COVERAGE)	129,226		11.4%
NET LEASABLE AREA (SF) (EXCLUDES EXISTING OUTPARCELS)	129,226		

		SF	AC	% OF SITE
EXISTING RETAIL A	PHASE I	13,770		
EXISTING RETAIL B	PHASE I	9,325		
EXISTING RETAIL C	PHASE I	7,000		
EXISTING RETAIL D	PHASE I	50,000		
EXISTING RETAIL E	PHASE I	4,200		
EXISTING RETAIL F	PHASE IV CHILD CARE	8,065		
PROPOSED RETAIL H	PROPOSED PHASE II	9,000		
EXISTING RETAIL I	PHASE III	4,553		
	RETAIL SUBTOTAL	105,911		
EXISTING OFFICE	PHASE I	7,500		
EXISTING OFFICE #2	(PHASE V)	7,500		
EXISTING OFFICE #3	(PHASE VI)	7,500		
BUILDING AREA		128,411	2.94	8.02%
BUILDING HEIGHT		35' MAX		

PHASE I THRU IV PARKING

	SF	SPACES REQUIRED	SPACES PROVIDED
RETAIL/RESTAURANT/CHILD CARE @ 1/200 SF	105,911	530	
OFFICE @ 1/200 SF GROSS	7,500	38	
PHASE I-IV TOTAL (EXCLUDES EXISTING OUTPARCELS)	113,411	568	

PHASE V & VI PARKING

	SF	SPACES REQUIRED	SPACES PROVIDED
OFFICES #2 & #3 @ 1/200 SF GROSS	15,000	75	0
FUTURE ADDITIONAL PARKING			48
PHASE V & VI TOTAL		75	48
PHASE I THRU VI TOTAL		643	869
HANDICAP		16	25

TOTAL SITE	1,132,630		100.00%
	REQUIRED SF	PROVIDED SF	% OF SITE
TOTAL IMPERVIOUS SURFACE AREA		361,202	31.89%
LANDSCAPED VEHICULAR USE AREAS	341,180	382,209	
LANDSCAPED BUFFER AREAS	73,817	73,817	
BUILDING COVERAGE		129,226	11.4%
ADDITIONAL GREEN AREA (100 SF/EXTRA PARKING SPACE)	24,271	24,271	
BUILDING PERIMETER LANDSCAPE AREA (100 SF / 1000 SF OF BLDG.)	12,486	37,269	
TOTAL GREEN AREA	164,754	493,295	43.55%
RETENTION POND		152,460	13.46%

	REQUIRED	PROVIDED
FAR	0.35	0.11
BUILDING COVERAGE	0.25	0.11
BUILDING HEIGHT	35'	35'
NUMBER OF STORIES		1
FINISHED FLOOR ELEVATION		
TYPE OF CONSTRUCTION		TYPE 'II B' FULLY SPRINKLERED

CONDITIONS OF APPROVAL:

1. ALL PREVIOUS CONDITIONS OF APPROVAL NOT AFFECTED BY THIS SITE PLAN AMENDMENT APPLICATION ARE IN EFFECT.
2. ARCHITECTURAL REVIEW BOARD (ARB) APPROVAL IS REQUIRED TO PERMITTING.

LOCATION MAP

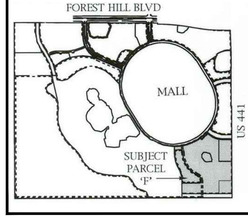

ZONING STAMPS

WILLIAMSON DACAR ASSOCIATES®
Architecture Planning Engineering
ARCHITECTURE / ENGINEERING / PLANNING
13900 LIGHTWAVE DRIVE SUITE 106
CLEARWATER, FL 33760
PH (727) 524-1818 www.williamsondacar.com

Architect: AA 0002541
Engineering: EB 0006884

WELLINGTON GREEN PARCEL "F"
PHASE II RETAIL "H" MODIFICATION
PETITION NO. 16-18 (2016-08 ASA 53)
2545 SOUTH STATE ROAD 7
WELLINGTON, FLORIDA 33414

Revisions of Drawings

No.	Date	Revisions

Issues of Drawings

No.	Date	Issues
1	6-15-16	100% CD - Permit Set

Phase:
Checked:
Drawn: BDL

Drawing Title: OVERALL SITE PLAN

WDA Proj. No.: 1526-01
Owner Proj. No.:
Scale: AS NOTED

Sheet No. A1.1

No. of Sheets.:

THIS DOCUMENT CONTAINS COPYRIGHTED MATERIAL AND TRADE SECRET INFORMATION BELONGING EXCLUSIVELY TO WILLIAMSON DACAR ASSOCIATES, INC. ANY UNAUTHORIZED USE, DISCLOSURE, DISSEMINATION OR DUPLICATION OF ANY OF THE INFORMATION CONTAINED HEREIN MAY RESULT IN LIABILITY UNDER APPLICABLE LAWS.

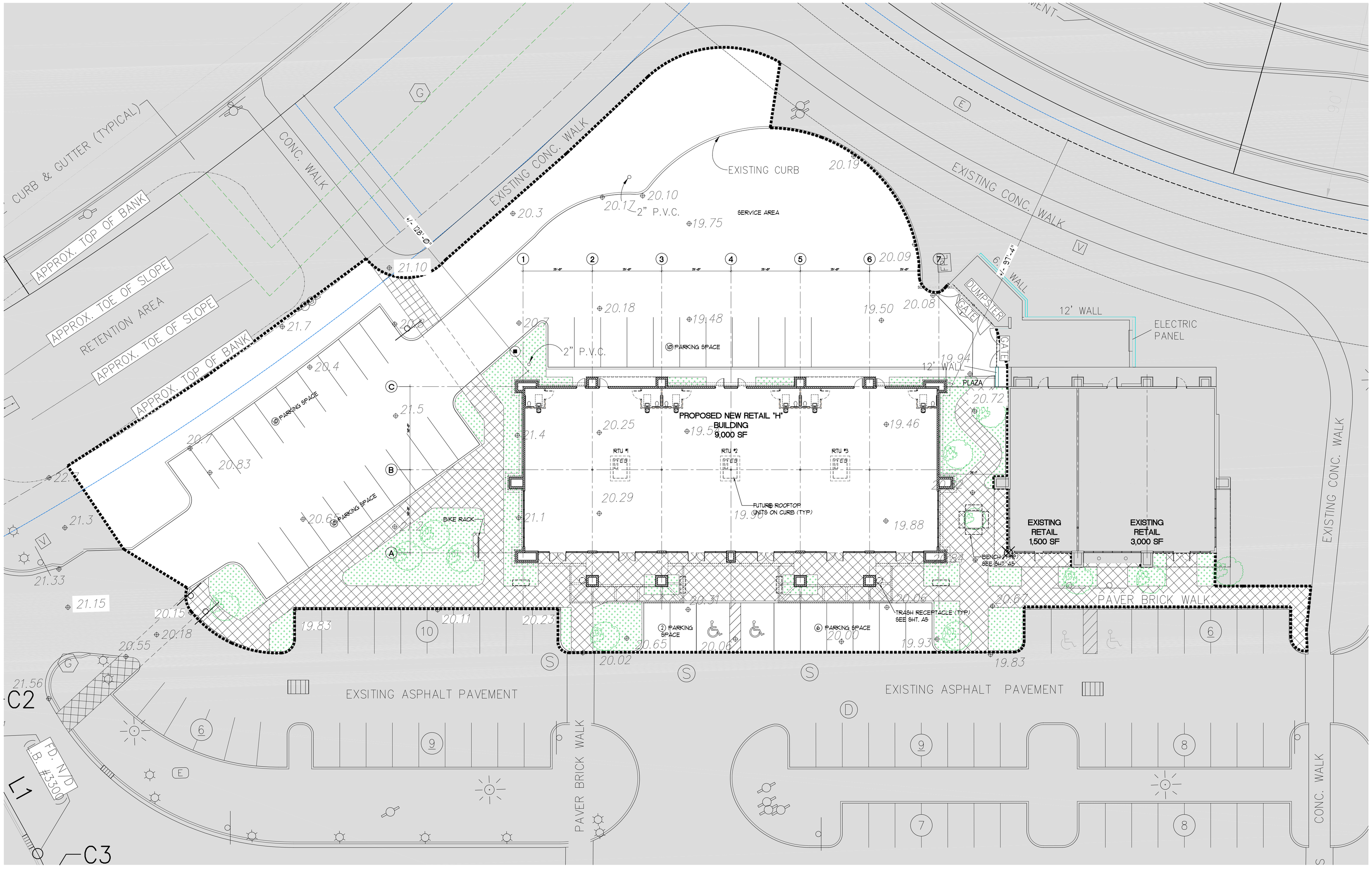

1 A2.1 ARCHITECTURAL SITE PLAN
SCALE: 1/16" = 1'-0"

THIS DOCUMENT CONTAINS COPYRIGHTED MATERIAL AND TRADE SECRET INFORMATION BELONGING EXCLUSIVELY TO WILLIAMSON DACAR ASSOCIATES, INC. ANY UNAUTHORIZED USE, DISCLOSURE, DISSEMINATION OR DUPLICATION OF ANY OF THE INFORMATION CONTAINED HEREIN MAY RESULT IN LIABILITY UNDER APPLICABLE LAWS.

WILLIAMSON DACAR ASSOCIATES
architecture | planning | landscape architecture | engineering
ARCHITECTURE / ENGINEERING / PLANNING
1550 MADRUGA AVENUE, SUITE 106
CLEARWATER, FL. 33760
PH (727) 725-0951 www.williamsondacar.com

Architect: AA 0002541
Engineering: EB 0006884

WELLINGTON GREEN PARCEL "F"
PHASE II RETAIL "H" MODIFICATION
PETITION NO. 16-18 (2016-08 ASA 53)
2545 SOUTH STATE ROAD 7
WELLINGTON, FLORIDA 33414

Revisions of Drawings

No.	Date	Revisions

Issues of Drawings

No.	Date	Issues
1	6-15-16	100% CD - Permit Set

Phase:
Checked:
Drawn: JA

Drawing Tiltle

ARCHITECTURAL SITE PLAN

WDA Proj. No.: 1526-01
Owner Proj. No.:
Scale: AS NOTED

Sheet No.

A2.1

No. of Sheets.:

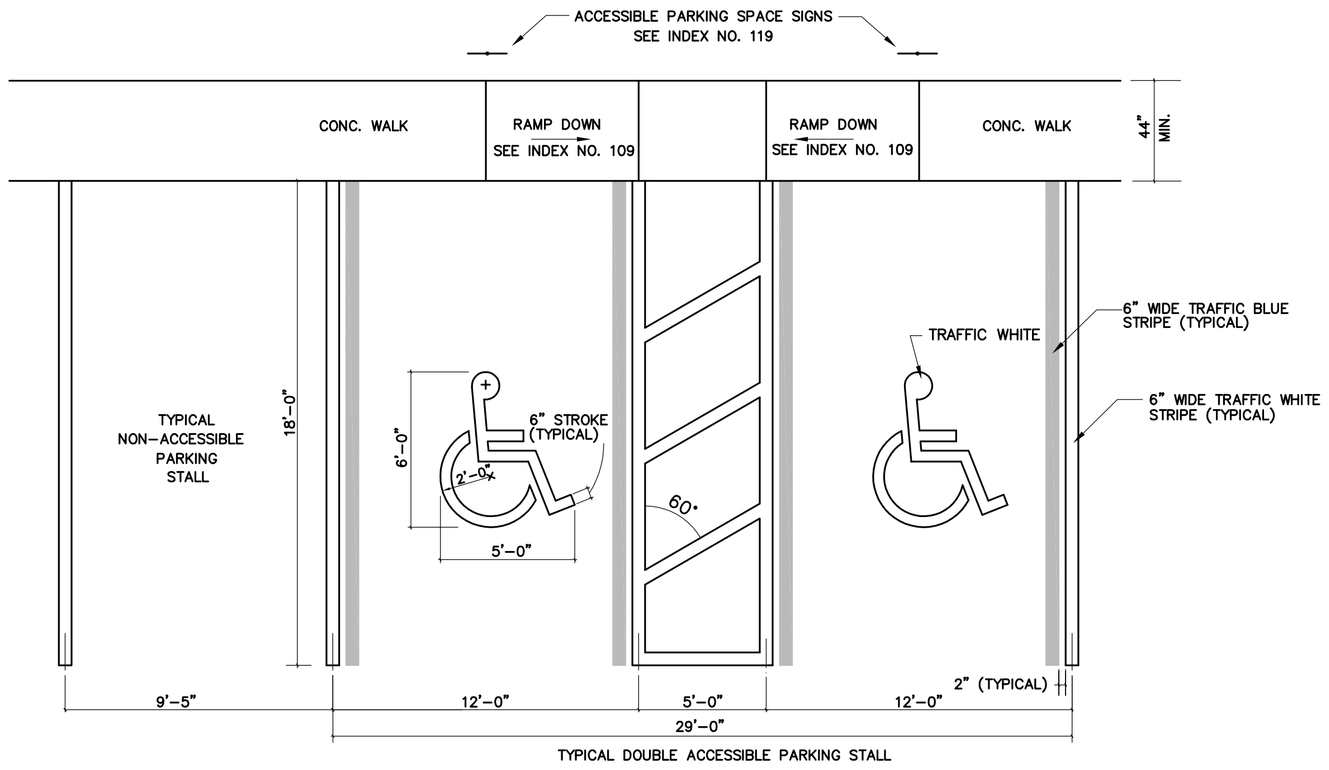

NOTE:
All pavement markings to be thermoplastic.

1 A2.2 TYPICAL PARKING STALLS
SCALE: 1/4"=1'-0"

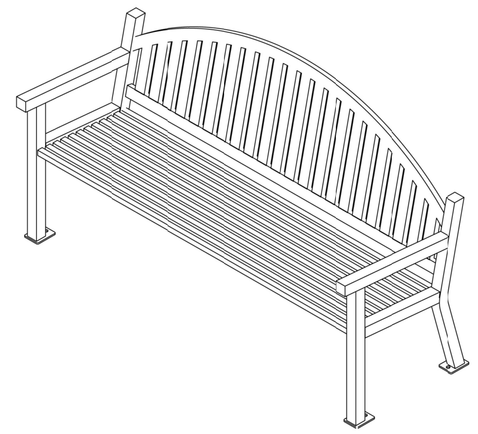

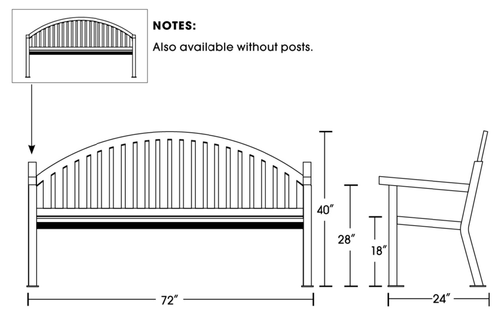

2 A2.2 TYPICAL OUTDOOR BENCH
SCALE: NTS (OR MATCH EXISTING)

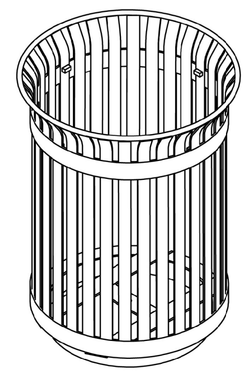

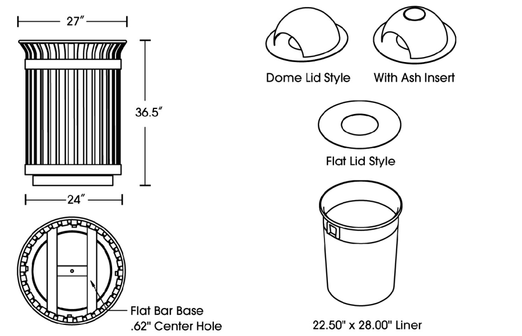

3 A2.2 TYPICAL OUTDOOR TRASH RECEPTACLE
SCALE: NTS (OR MATCH EXISTING)

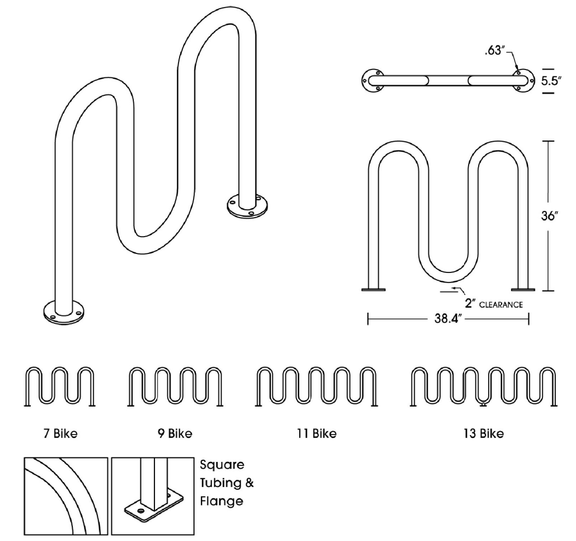

4 A2.2 TYPICAL OUTDOOR BIKE RACK
SCALE: NTS (OR MATCH EXISTING)

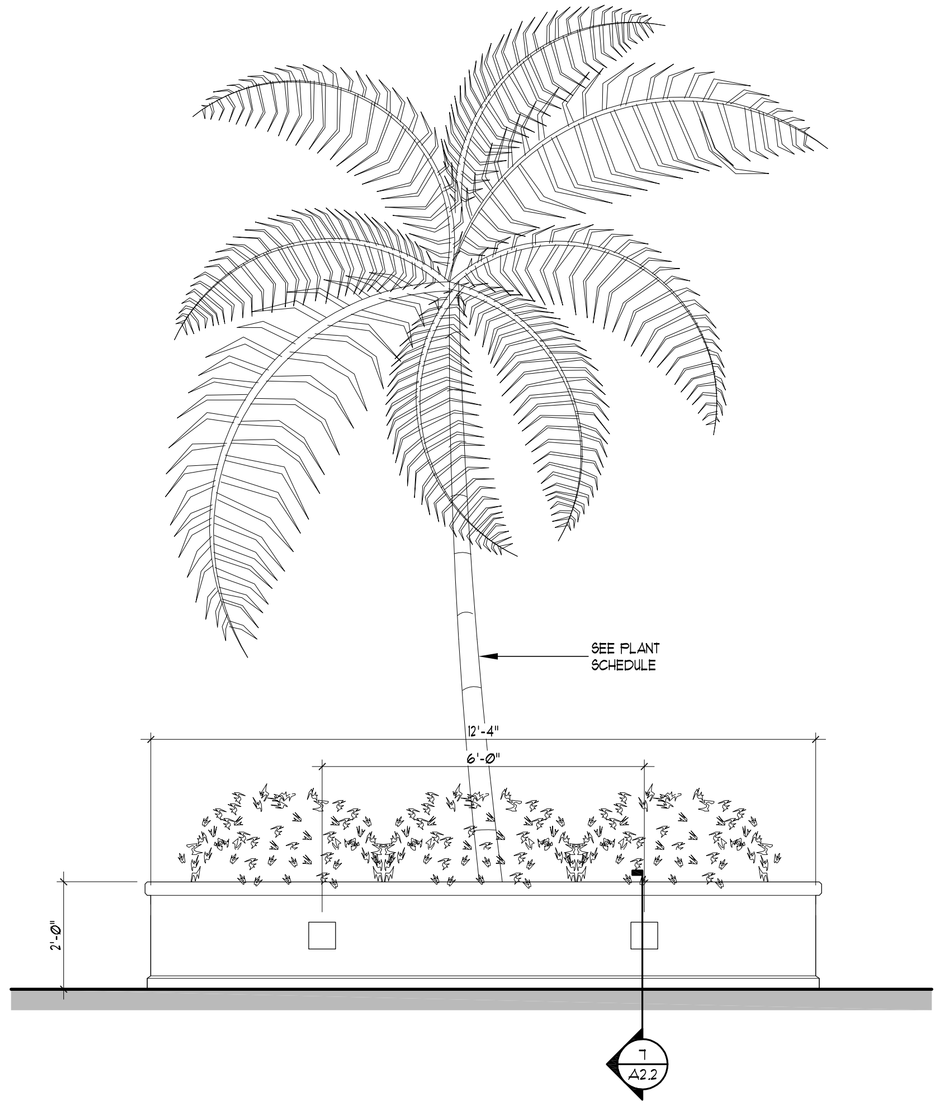

5 A2.2 TYPICAL PLANTER ELEVATION
SCALE: 1/2"=1'-0"

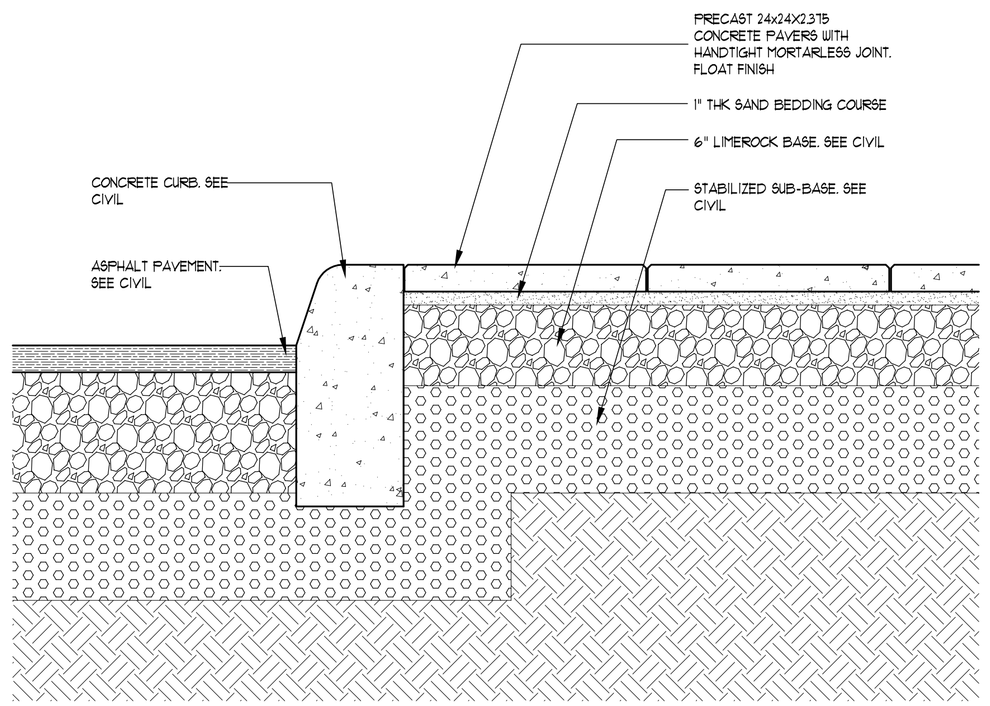

6 A2.2 TYPICAL CONCRETE PAVER SECTION
SCALE: 1-1/2"=1'-0"

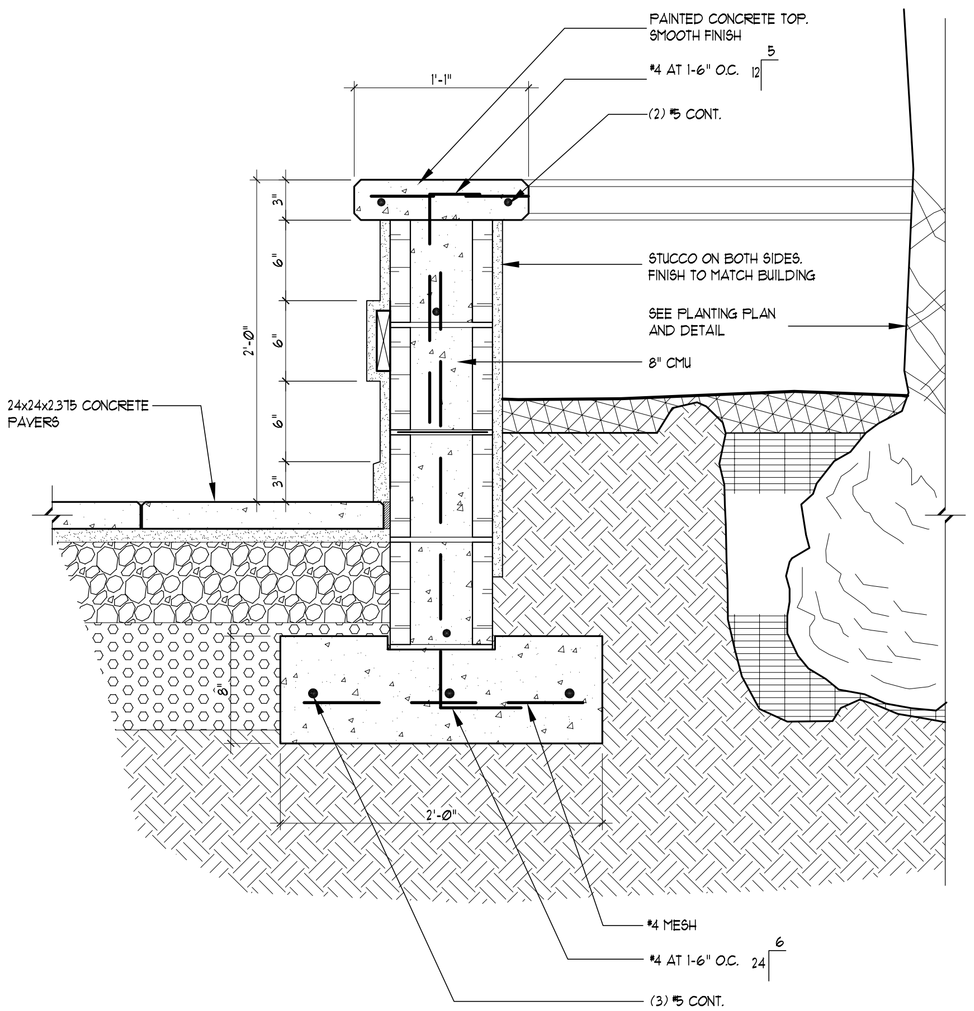

7 A2.2 TYPICAL PLANTER SECTION
SCALE: 1-1/2"=1'-0"

THIS DOCUMENT CONTAINS COPYRIGHTED MATERIAL AND TRADE SECRET INFORMATION BELONGING EXCLUSIVELY TO WILLIAMSON DACAR ASSOCIATES, INC.
ANY UNAUTHORIZED USE, DISCLOSURE, DUPLICATION OR APPLICATION OF ANY OF THE INFORMATION CONTAINED HEREIN MAY RESULT IN LIABILITY UNDER APPLICABLE LAWS.

WILLIAMSON DACAR ASSOCIATES
architecture / planning / engineering
ARCHITECTURE / ENGINEERING / PLANNING
1550 LARGO ROAD SOUTH, SUITE 106
CLEARWATER, FL. 33760
PH (727) 725-0951 www.williamsondacar.com

Architect: AA 0002541
Engineering: EB 0006884

WELLINGTON GREEN PARCEL "F"
PHASE II RETAIL "H" MODIFICATION
PETITION NO. 16-18 (2016-08 ASA 53)
2545 SOUTH STATE ROAD 7
WELLINGTON, FLORIDA 33414

Revisions of Drawings

No.	Date	Revisions

Issues of Drawings

No.	Date	Issues
1	6-15-16	100% CD - Permit Set

Phase:
Checked:
Drawn: BDL

Drawing Tittle

SITE DETAILS

WDA Proj. No.: 1526-01
Owner Proj. No.:
Scale: AS NOTED

Sheet No.

A2.2

No. of Sheets.:

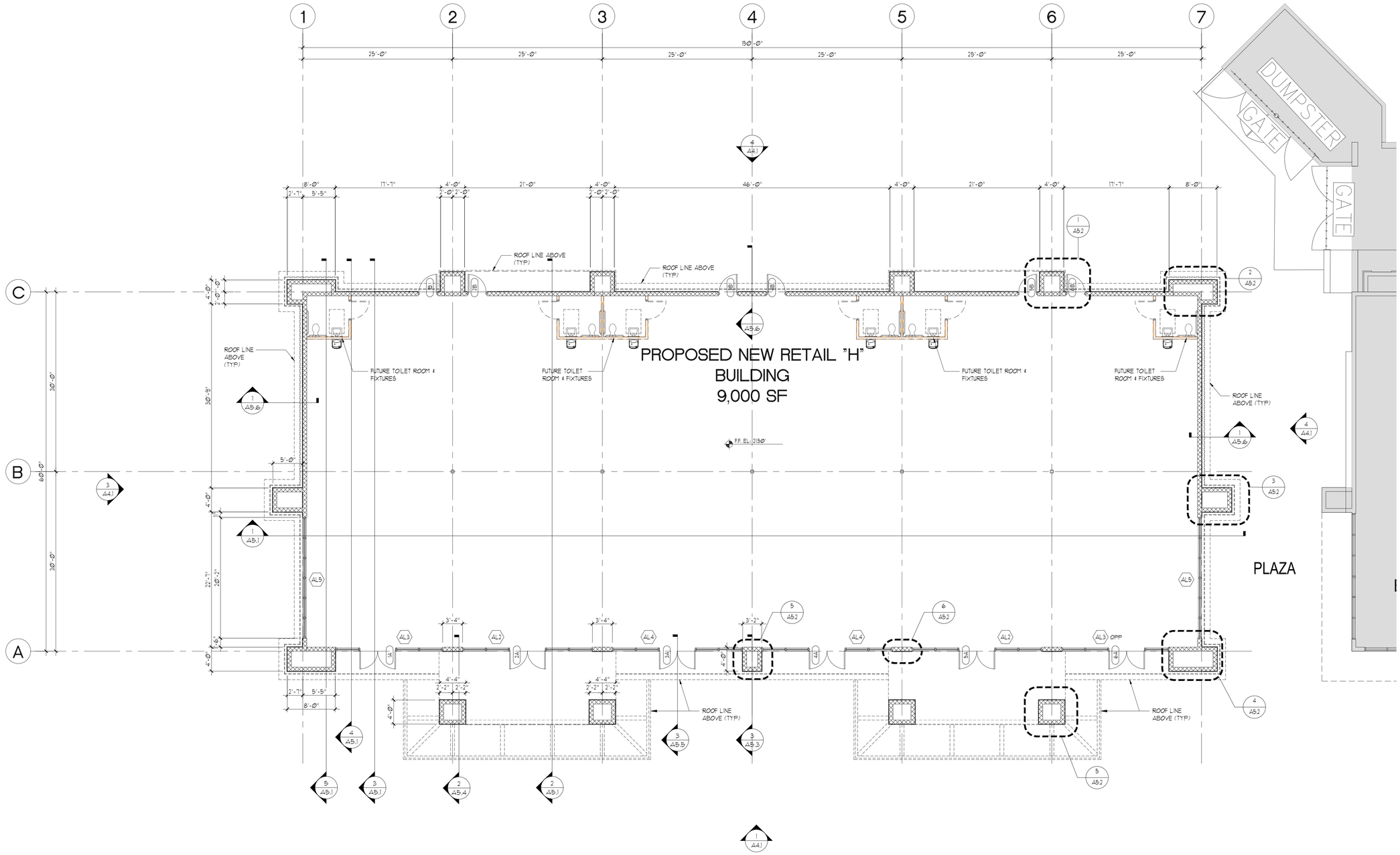

1 FLOOR PLAN
A3.1 SCALE: 1/8" = 1'-0"

THIS DOCUMENT CONTAINS COPYRIGHTED MATERIAL AND TRADE SECRET INFORMATION BELONGING EXCLUSIVELY TO WILLIAMSON DACAR ASSOCIATES, INC. ANY UNAUTHORIZED USE, DISCLOSURE, DISSEMINATION OR DUPLICATION OF ANY OF THE INFORMATION CONTAINED HEREIN MAY RESULT IN LIABILITY UNDER APPLICABLE LAWS.

WILLIAMSON DACAR ASSOCIATES
Architecture / Planning / Engineering
ARCHITECTURE / ENGINEERING / PLANNING
15590 CLEARWATER DRIVE SUITE 106
CLEARWATER, FLORIDA 33760
PH (727) 725-0951 www.williamsondacar.com

Architect: AA 0002541
Engineering: EB 0006884

WELLINGTON GREEN PARCEL "F"
PHASE II RETAIL "H" MODIFICATION
PETITION NO. 16-18 (2016-08 ASA 53)
2545 SOUTH STATE ROAD 7
WELLINGTON, FLORIDA 33414

Revisions of Drawings

No.	Date	Revisions

Issues of Drawings

No.	Date	Issues
1	06.15.16	100% CD – PERMIT SET

Phase:
Checked:
Drawn: BDL

Drawing Tittle
FLOOR PLAN

WDA Proj. No.: 1526-01
Owner Proj. No.:
Scale: AS NOTED

Sheet No.
A3.1
No. of Sheets.:

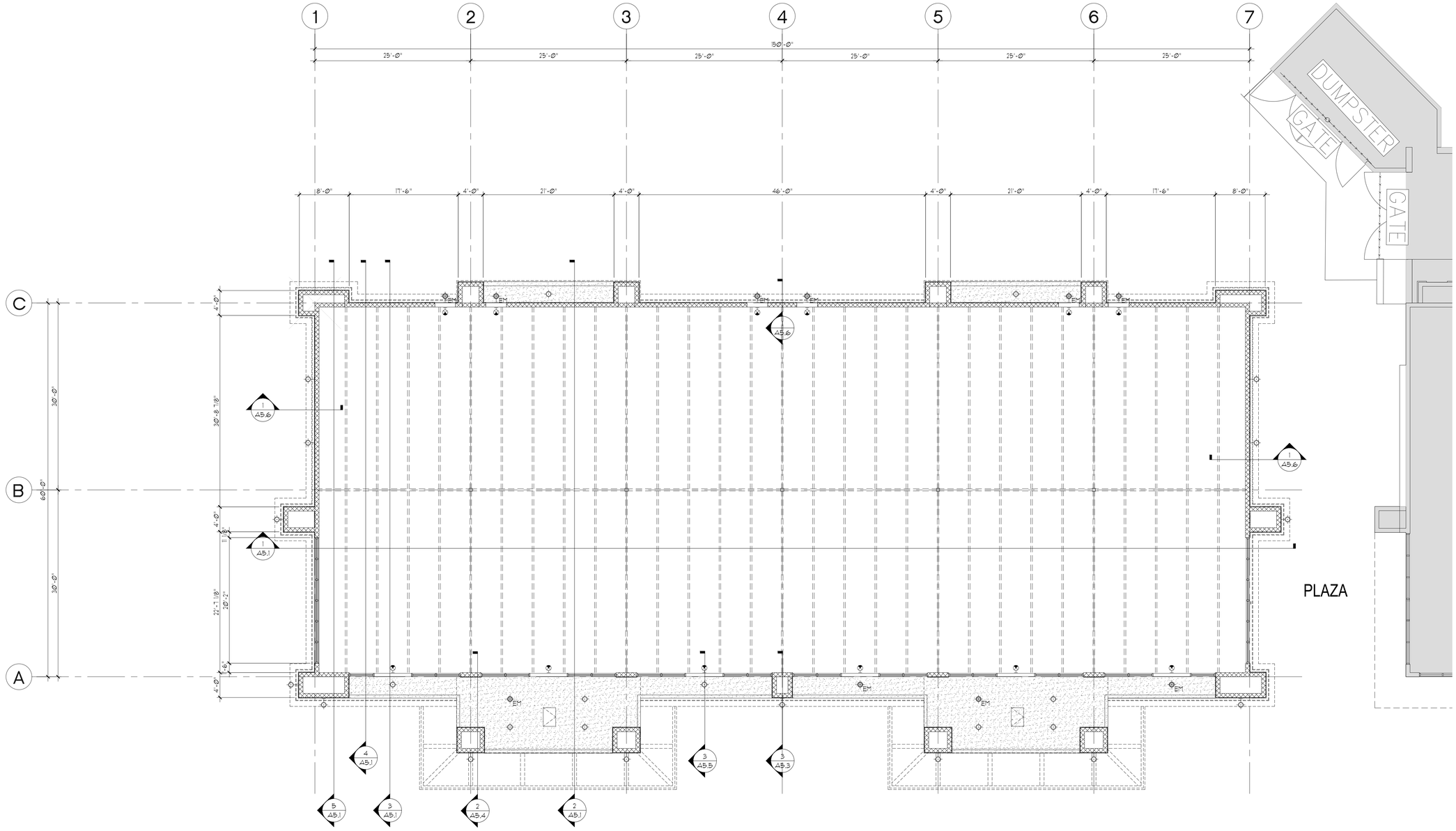

1 / A32 REFLECTED CEILING PLAN
SCALE: 1/8" = 1'-0"

THIS DOCUMENT CONTAINS COPYRIGHTED MATERIAL AND TRADE SECRET INFORMATION BELONGING EXCLUSIVELY TO WILLIAMSON DACAR ASSOCIATES, INC. ANY UNAUTHORIZED USE, DISCLOSURE, DISSEMINATION OR DUPLICATION OF ANY OF THE INFORMATION CONTAINED HEREIN MAY RESULT IN LIABILITY UNDER APPLICABLE LAWS.

WILLIAMSON DACAR ASSOCIATES
Architecture / Planning / Engineering
ARCHITECTURE / ENGINEERING / PLANNING
15901 GLENEAGLES DRIVE SUITE 106
PALOS PARK, IL 60464
PH (727) 725-0951 www.williamsondacar.com

Architect: AA 0002541
Engineering: EB 0006884

WELLINGTON GREEN PARCEL "F"
PHASE II RETAIL "H" MODIFICATION
PETITION NO. 16-18 (2016-08 ASA 53)
2545 SOUTH STATE ROAD 7
WELLINGTON, FLORIDA 33414

Revisions of Drawings

No.	Date	Revisions

Issues of Drawings

No.	Date	Issues
1	06.15.16	100% CD – PERMIT SET

Phase:
Checked:
Drawn: BDL

Drawing Tittle
REFLECTED CEILING PLAN

WDA Proj. No.: 1526-01
Owner Proj. No.:
Scale: AS NOTED

Sheet No.
A3.2
No. of Sheets.:

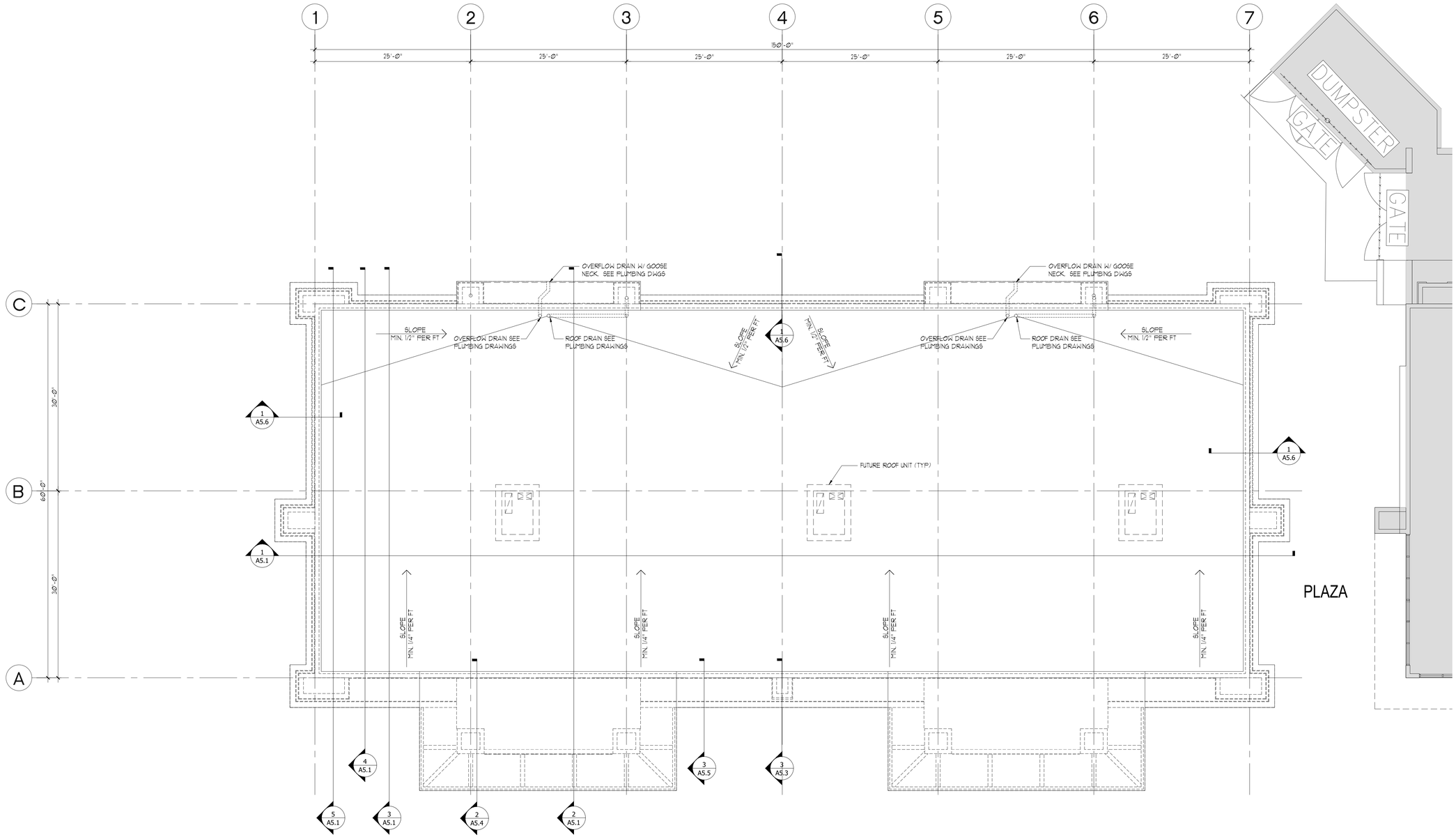

1 A3.2 ROOF PLAN
SCALE: 1/8" = 1'-0"

THIS DOCUMENT CONTAINS COPYRIGHTED MATERIAL AND TRADE SECRET INFORMATION BELONGING EXCLUSIVELY TO WILLIAMSON DACAR ASSOCIATES, INC. ANY UNAUTHORIZED USE, DISCLOSURE, DISSEMINATION OR DUPLICATION OF ANY OF THE INFORMATION CONTAINED HEREIN MAY RESULT IN LIABILITY UNDER APPLICABLE LAWS.

WILLIAMSON DACAR ASSOCIATES INCORPORATED
Architecture Planning Engineering
ARCHITECTURE / ENGINEERING / PLANNING
15500 LIGHTWAVE DRIVE SUITE 106
CLEARWATER, FL. 33760
PH (727) 725-0951 www.williamsondacar.com

Architect: AA 0002541
Engineering: EB 0006884

WELLINGTON GREEN PARCEL "F"
PHASE II RETAIL "H" MODIFICATION
PETITION NO. 16-18 (2016-08 ASA 53)
2545 SOUTH STATE ROAD 7
WELLINGTON, FLORIDA 33414

Revisions of Drawings

No.	Date	Revisions

Issues of Drawings

No.	Date	Issues
1	06.15.16	100% CD – PERMIT SET

Phase:
Checked:
Drawn: BDL

Drawing Tiltle

ROOF PLAN

WDA Proj. No.: 1526-01
Owner Proj. No.:
Scale: AS NOTED

Sheet No.

A3.3

No. of Sheets.:

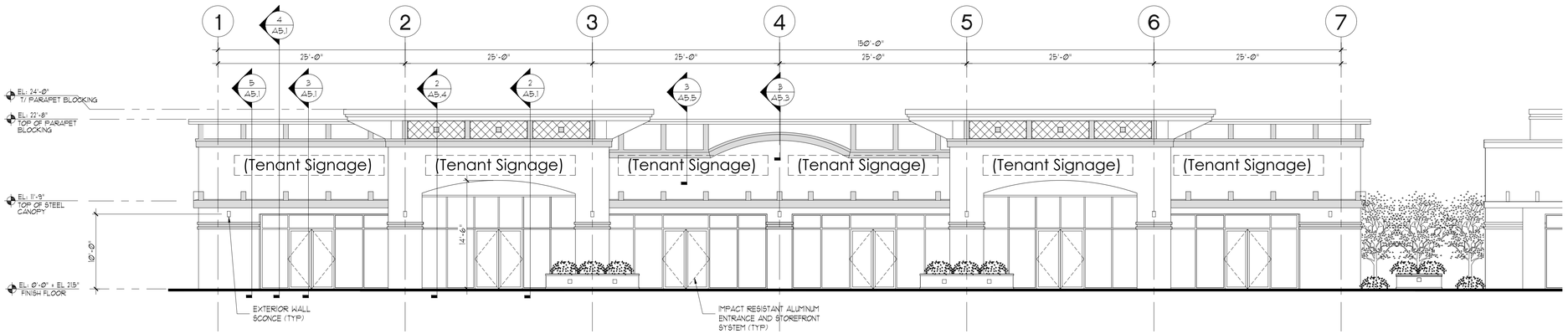

1 A4.1 RETAIL 'H' FRONT ELEVATION (SOUTH)
SCALE= 3/32" = 1'-0"

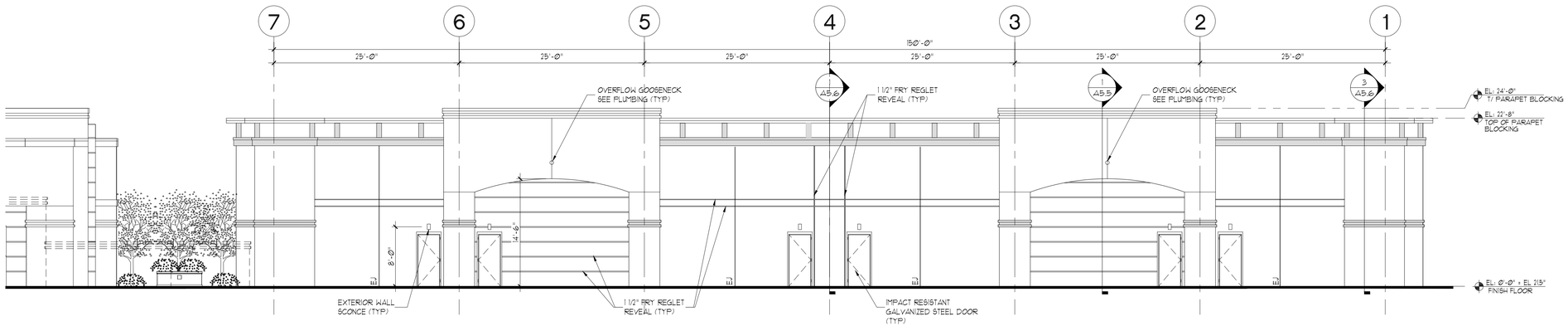

2 A4.1 RETAIL 'H' REAR ELEVATION (NORTH)
SCALE= 3/32" = 1'-0"

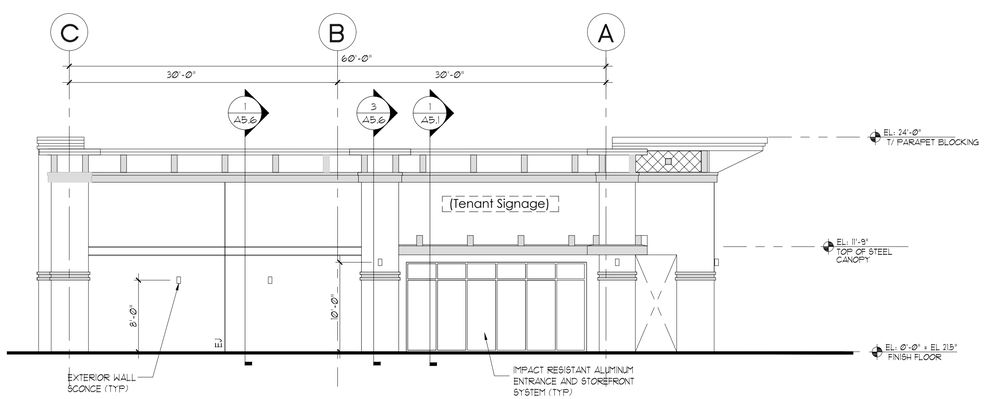

3 A4.1 RETAIL 'H' SIDE ELEVATION (WEST)
SCALE= 3/32" = 1'-0"

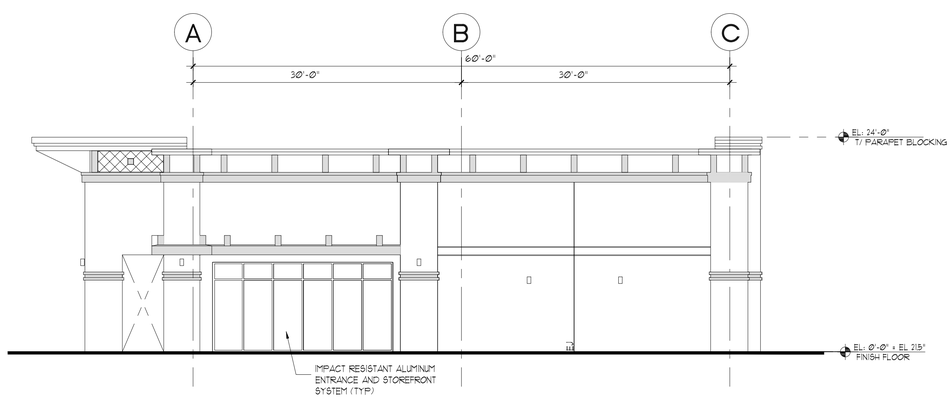

4 A4.1 RETAIL 'H' SIDE ELEVATION (EAST)
SCALE= 3/32" = 1'-0"

THIS DOCUMENT CONTAINS COPYRIGHTED MATERIAL AND TRADE SECRET INFORMATION BELONGING EXCLUSIVELY TO WILLIAMSON DACAR ASSOCIATES, INC. ANY UNAUTHORIZED USE, DISCLOSURE, DISSEMINATION OR DUPLICATION OF ANY OF THE INFORMATION CONTAINED HEREIN MAY RESULT IN LIABILITY UNDER APPLICABLE LAWS.

WILLIAMSON DACAR ASSOCIATES
Architecture Planning Engineering
ARCHITECTURE / ENGINEERING / PLANNING
15500 LIGHTWAVE DRIVE SUITE 106
CLEARWATER, FL. 33760
PH (727) 725-0951 www.williamsondacar.com

Architect: AA 0002541
Engineering: EB 0006884

WELLINGTON GREEN PARCEL "F"
PHASE II RETAIL "H" MODIFICATION
PETITION NO. 16-18 (2016-08 ASA 53)
2545 SOUTH STATE ROAD 7
WELLINGTON, FLORIDA 33414

Revisions of Drawings

No.	Date	Revisions

Issues of Drawings

No.	Date	Issues
1	06.15.16	100% CD – PERMIT SET

Phase:
Checked:
Drawn: JBA

Drawing Tittle
EXTERIOR BUILDING ELEVATIONS

WDA Proj. No.: 1526-01
Owner Proj. No.:
Scale: AS NOTED

Sheet No.
A4.1
No. of Sheets.:

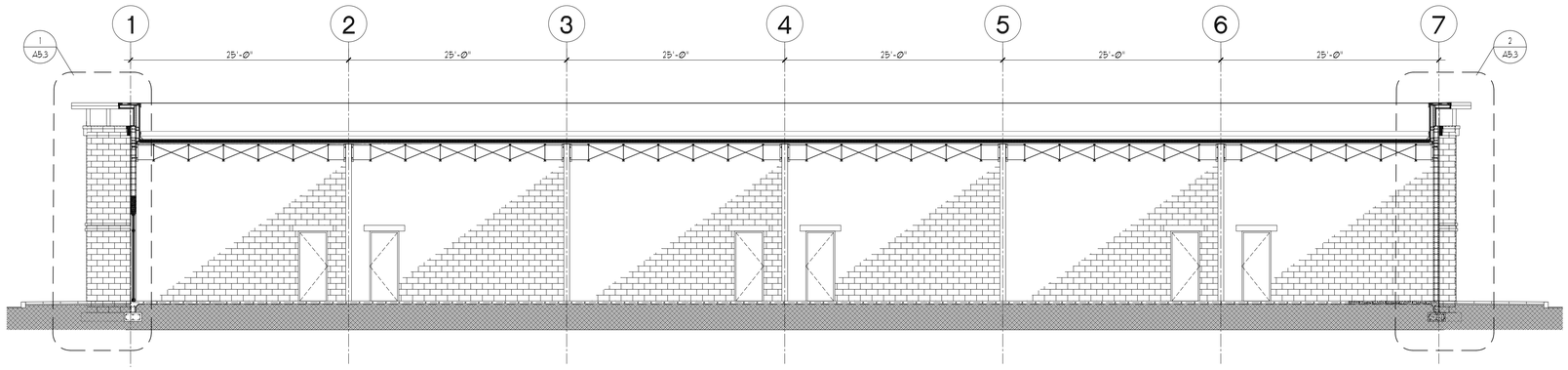

1 A51 BUILDING SECTION
SCALE: 1/8" = 1'-0"

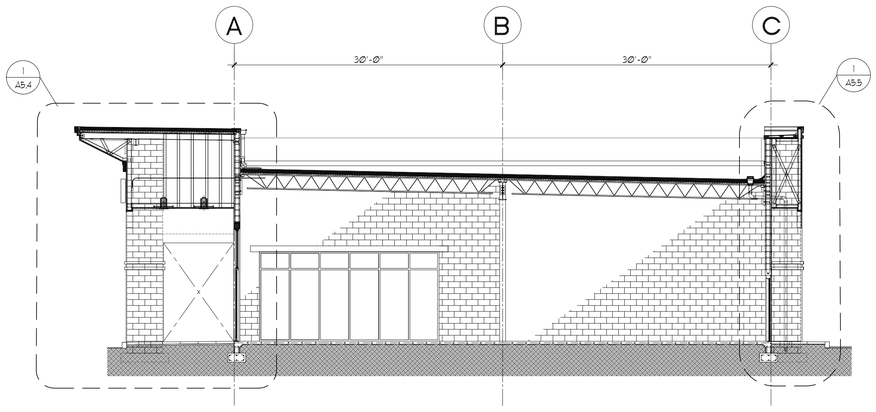

2 A51 BUILDING SECTION
SCALE: 1/8" = 1'-0"

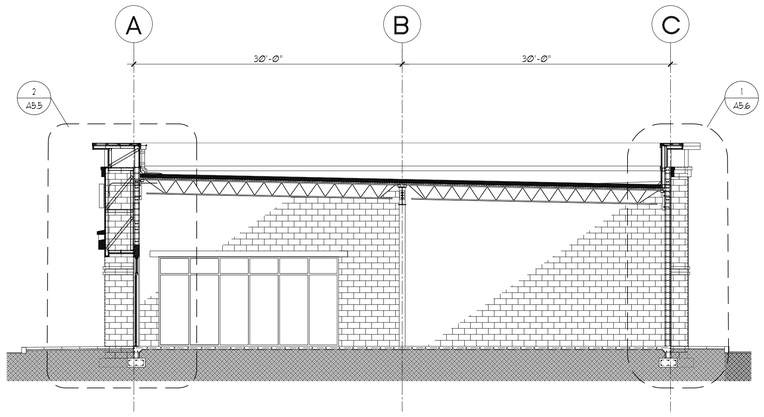

3 A51 BUILDING SECTION
SCALE: 1/8" = 1'-0"

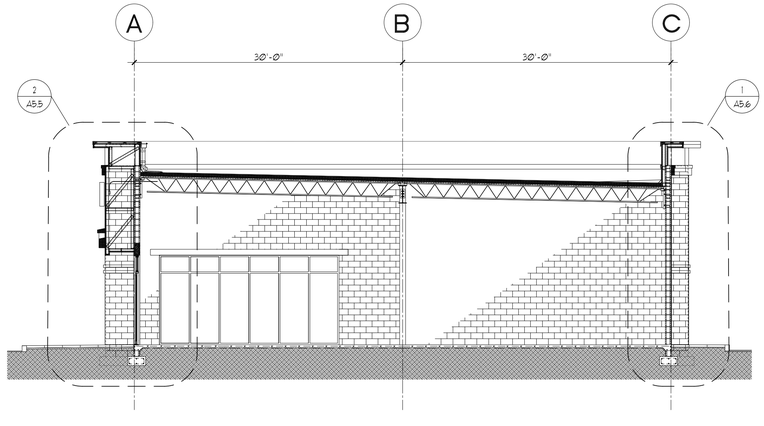

4 A51 BUILDING SECTION
SCALE: 1/8" = 1'-0"

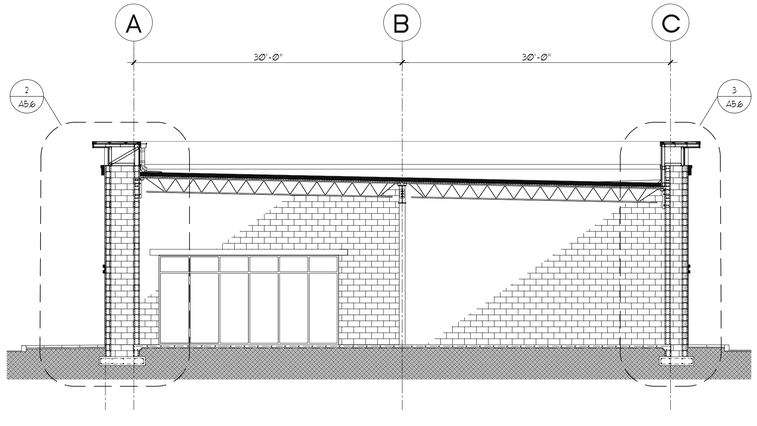

5 A51 BUILDING SECTION
SCALE: 1/8" = 1'-0"

THIS DOCUMENT CONTAINS COPYRIGHTED MATERIAL AND TRADE SECRET INFORMATION BELONGING EXCLUSIVELY TO WILLIAMSON DACAR ASSOCIATES, INC.
ANY UNAUTHORIZED USE, DISCLOSURE, DISSEMINATION OR DUPLICATION OF ANY OF THE INFORMATION CONTAINED HEREIN MAY RESULT IN LIABILITY UNDER APPLICABLE LAWS.

WILLIAMSON DACAR ASSOCIATES
Architecture Planning Engineering
ARCHITECTURE / ENGINEERING / PLANNING
15590 CLEARWATER DRIVE SUITE 106
DELRAY BEACH, FLORIDA 33484
PH (727) 725-0951 www.williamsondacar.com

Architect: AA 0002541
Engineering: EB 0006884

WELLINGTON GREEN PARCEL "F"
PHASE II RETAIL "H" MODIFICATION
PETITION NO. 16-18 (2016-08 ASA 53)
2545 SOUTH STATE ROAD 7
WELLINGTON, FLORIDA 33414

Revisions of Drawings

No.	Date	Revisions

Issues of Drawings

No.	Date	Issues
1	6-15-16	100% CD - Permit Set

Phase:
Checked:
Drawn: JA

Drawing Tiltle

BUILDING SECTIONS

WDA Proj. No.: 1526-01
Owner Proj. No.:
Scale: AS NOTED

Sheet No.

A5.1

No. of Sheets:

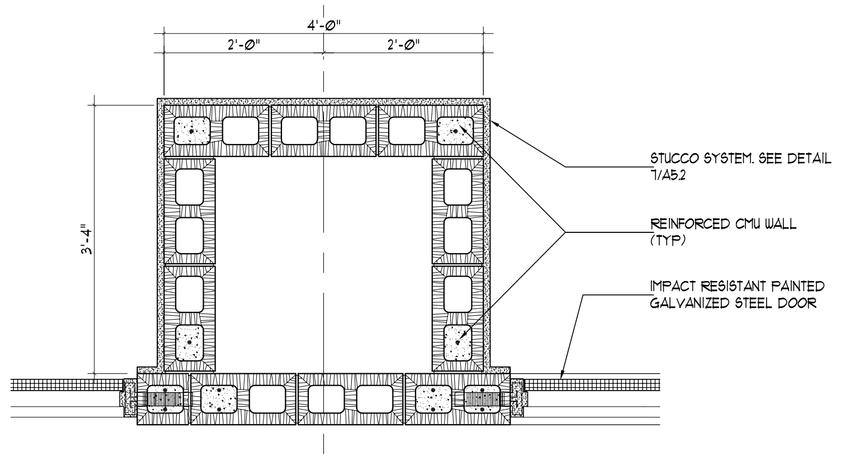

1 A5.2 WALL DETAIL
SCALE: 3/4" = 1'-Ø"

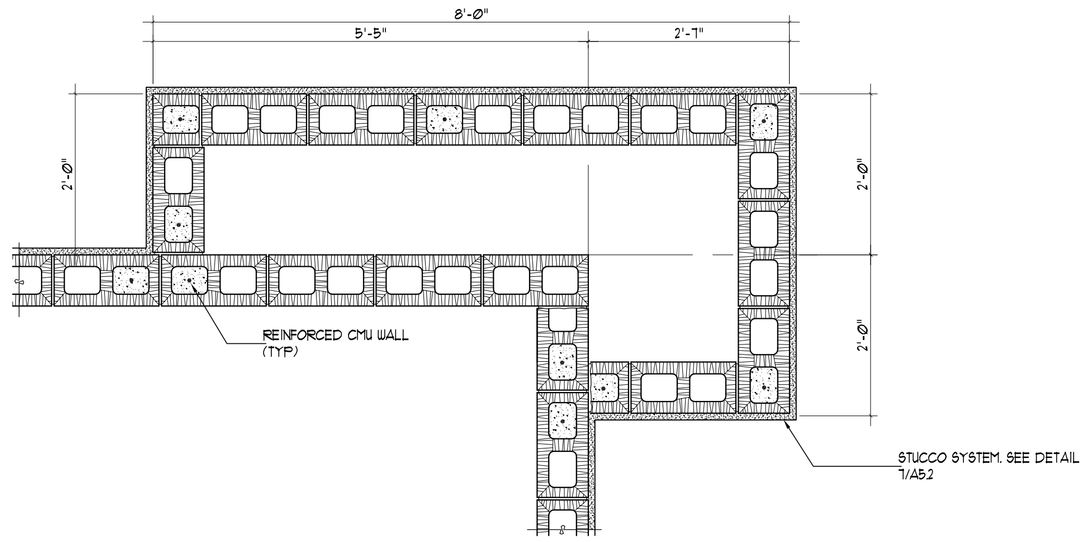

2 A5.2 WALL DETAIL
SCALE: 3/4" = 1'-Ø"

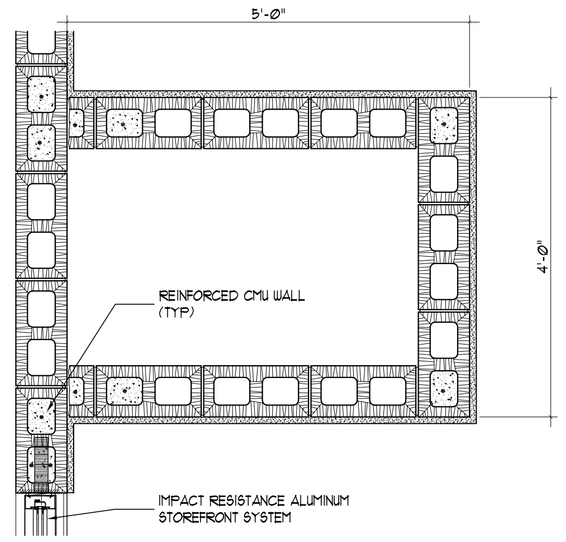

3 A5.2 WALL DETAIL
SCALE: 3/4" = 1'-Ø"

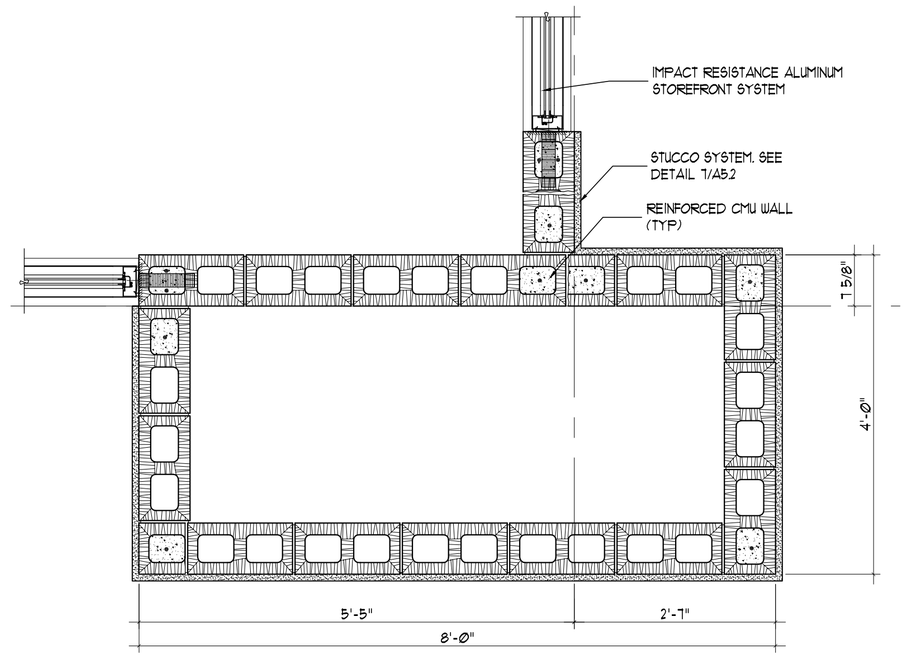

4 A5.2 WALL DETAIL
SCALE: 3/4" = 1'-Ø"

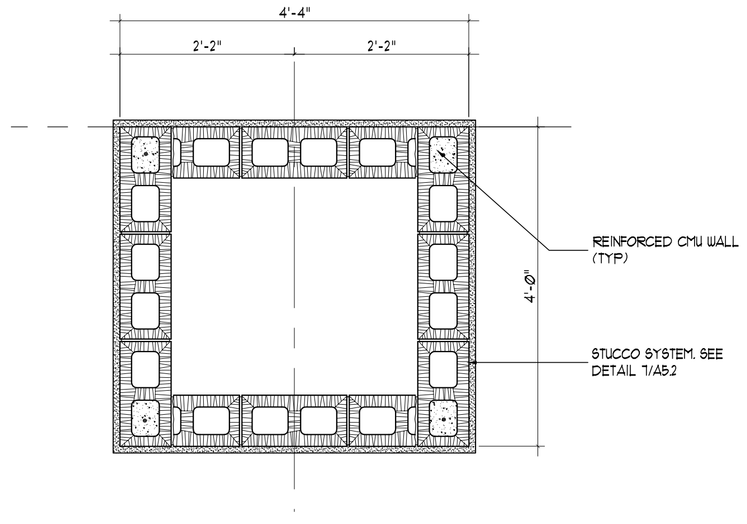

5 A5.2 WALL DETAIL
SCALE: 3/4" = 1'-Ø"

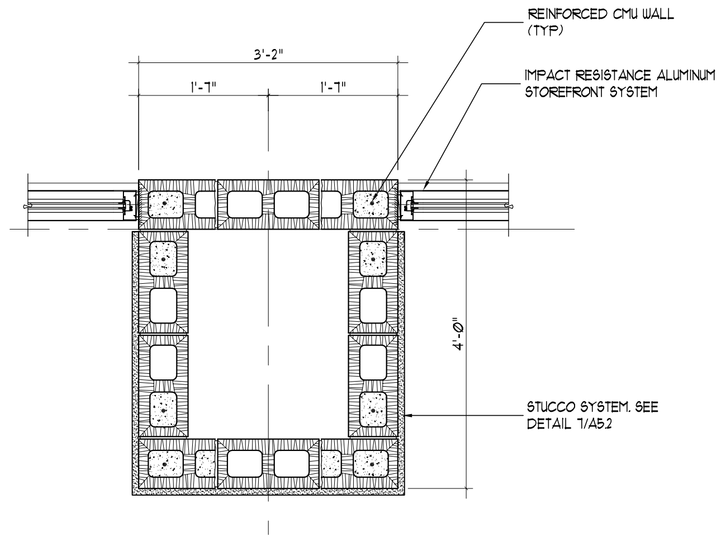

6 A5.2 WALL DETAIL
SCALE: 3/4" = 1'-Ø"

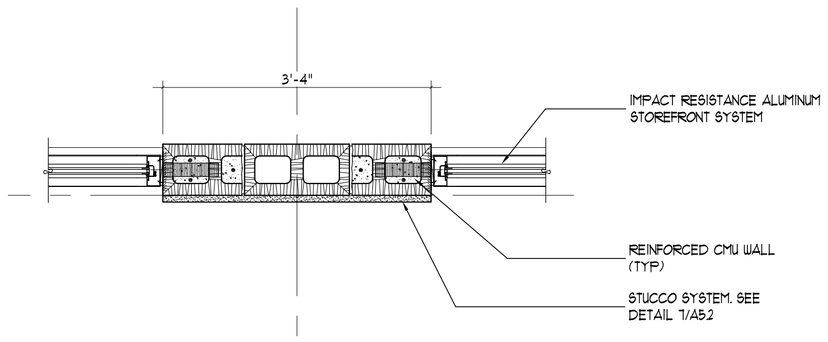

8 A5.2 STUCCO REVEAL DETAIL
SCALE: 3/4" = 1'-Ø"

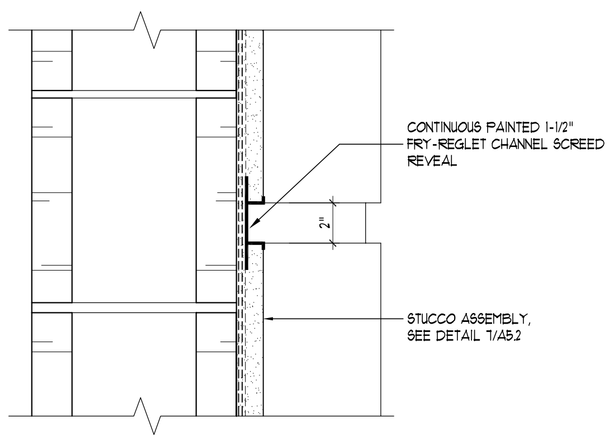

8 A5.2 STUCCO REVEAL DETAIL
SCALE: 3/4" = 1'-Ø"

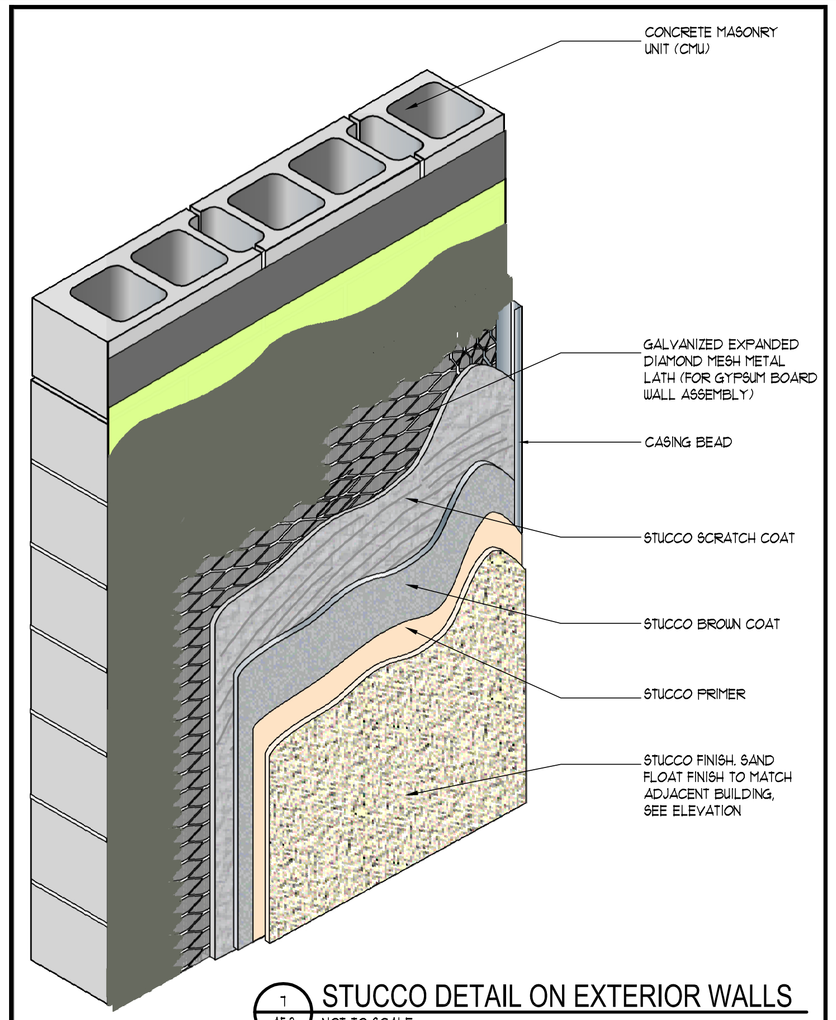

7 A5.2 STUCCO DETAIL ON EXTERIOR WALLS
NOT TO SCALE

THIS DOCUMENT CONTAINS COPYRIGHTED MATERIAL AND TRADE SECRET INFORMATION BELONGING EXCLUSIVELY TO WILLIAMSON DACAR ASSOCIATES, INC. ANY UNAUTHORIZED USE, DISCLOSURE, DISSEMINATION OR DUPLICATION OF ANY OF THE INFORMATION CONTAINED HEREIN MAY RESULT IN LIABILITY UNDER APPLICABLE LAWS.

WILLIAMSON DACAR ASSOCIATES
Architecture Planning Engineering
ARCHITECTURE / ENGINEERING / PLANNING
11500 LIGHTWAVE DRIVE SUITE 106
CLEARWATER, FL 33760
PH: (727) 724-8551 www.williamsondacar.com

Architect: AA 0002541
Engineering: EB 0006884

WELLINGTON GREEN PARCEL "F"
PHASE II RETAIL "H" MODIFICATION
PETITION NO. 16-18 (2016-08 ASA 53)
2545 SOUTH STATE ROAD 7
WELLINGTON, FLORIDA 33444

Revisions of Drawings

No.	Date	Revisions

Issues of Drawings

No.	Date	Issues
1	06.15.16	100% CD OWNER REVIEW

Phase:
Checked:
Drawn: JA

Drawing Title

TYPICAL WALL DETAILS

WDA Proj. No.: 1526-01
Owner Proj. No.:
Scale: AS NOTED

Sheet No.

A5.2

No. of Sheets.:

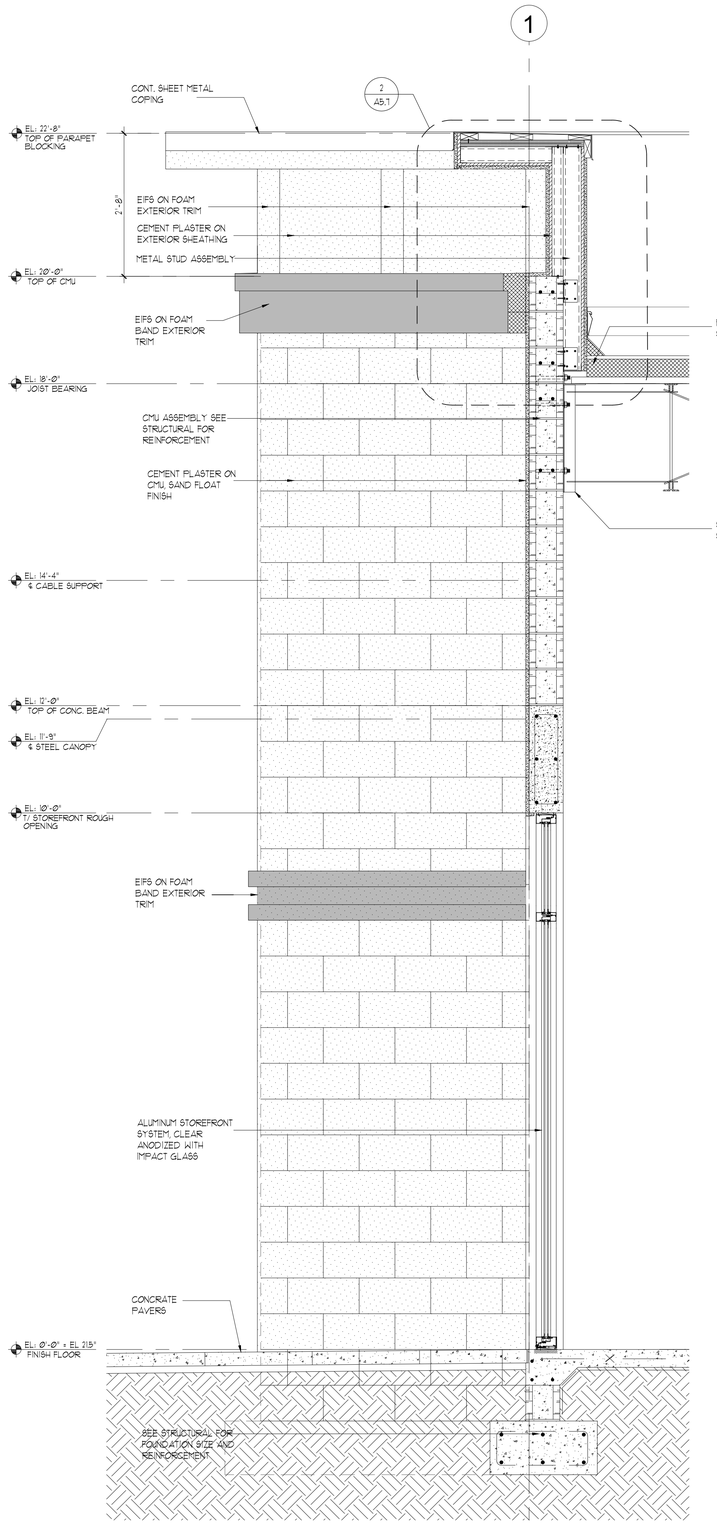

1 A5.3 WALL SECTION
SCALE: 3/4" = 1'-0"

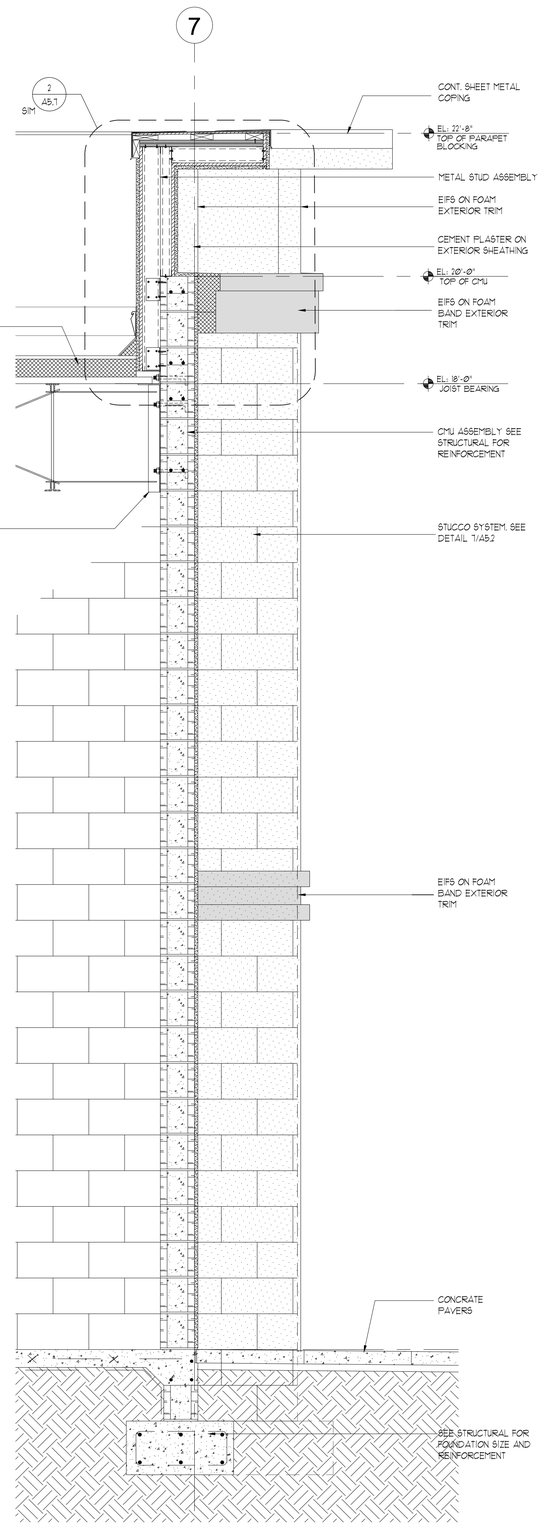

2 A5.3 WALL SECTION
SCALE: 3/4" = 1'-0"

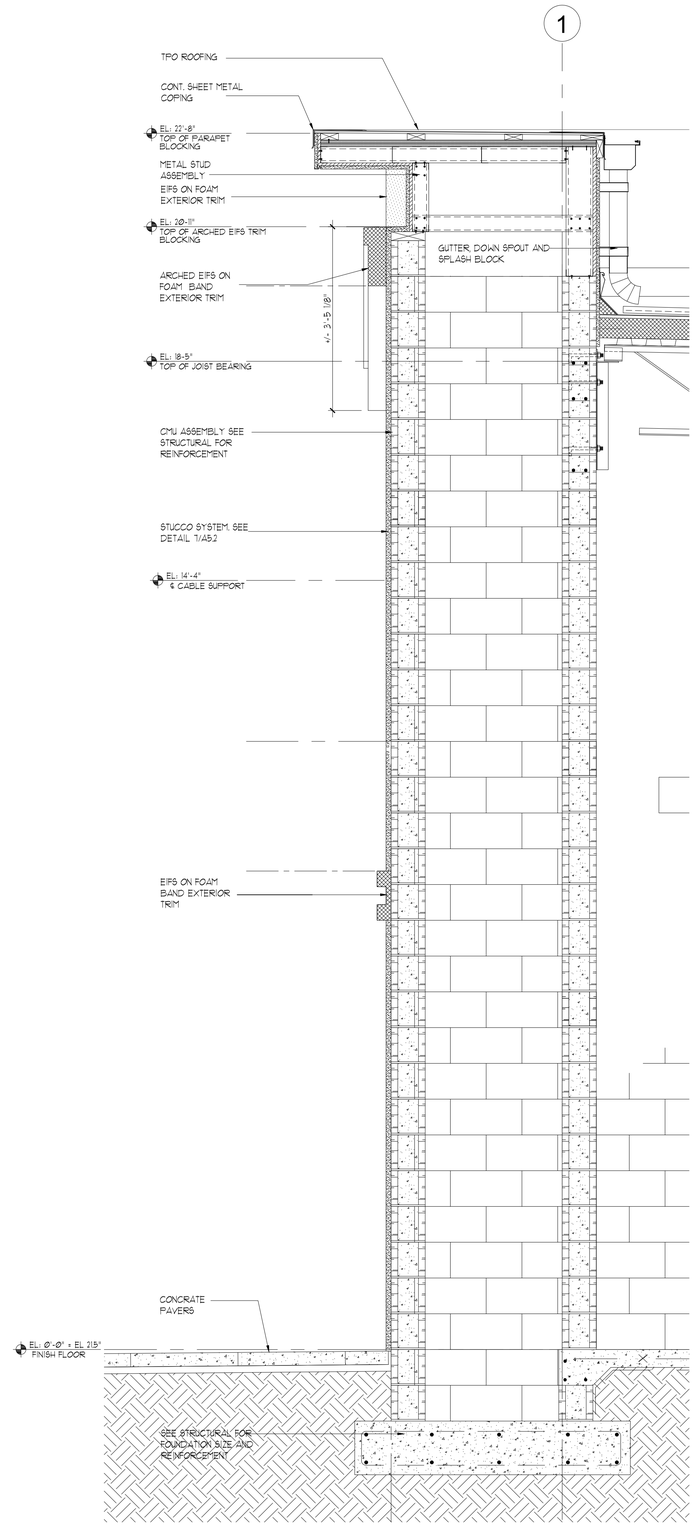

3 A5.3 WALL SECTION
SCALE: 3/4" = 1'-0"

THIS DOCUMENT CONTAINS COPYRIGHTED MATERIAL AND TRADE SECRET INFORMATION BELONGING EXCLUSIVELY TO WILLIAMSON DACAR ASSOCIATES, INC. ANY UNAUTHORIZED USE, DISCLOSURE, DISSEMINATION OR DUPLICATION OF ANY OF THE INFORMATION CONTAINED HEREIN MAY RESULT IN LIABILITY UNDER APPLICABLE LAWS.

WILLIAMSON DACAR ASSOCIATES INCORPORATED
Architecture Planning Engineering
ARCHITECTURE / ENGINEERING / PLANNING
15500 LIGHTWAVE DRIVE SUITE 106
CLEARWATER, FL. 33760
PH (727) 725-0951 www.williamsondacar.com

Architect: AA 0002541
Engineering: EB 0006884

WELLINGTON GREEN PARCEL "F"
PHASE II RETAIL "H" MODIFICATION
PETITION NO. 16-18 (2016-08 ASA 53)
2545 SOUTH STATE ROAD 7
WELLINGTON, FLORIDA 33414

Revisions of Drawings

No.	Date	Revisions

Issues of Drawings

No.	Date	Issues
1	06.15.16	100%CD – PERMIT SET

Phase:
Checked:
Drawn: JA

Drawing Tittle
WALL SECTIONS

WDA Proj. No.: 1526-01
Owner Proj. No.:
Scale: AS NOTED
Sheet No.
A5.3
No. of Sheets.:

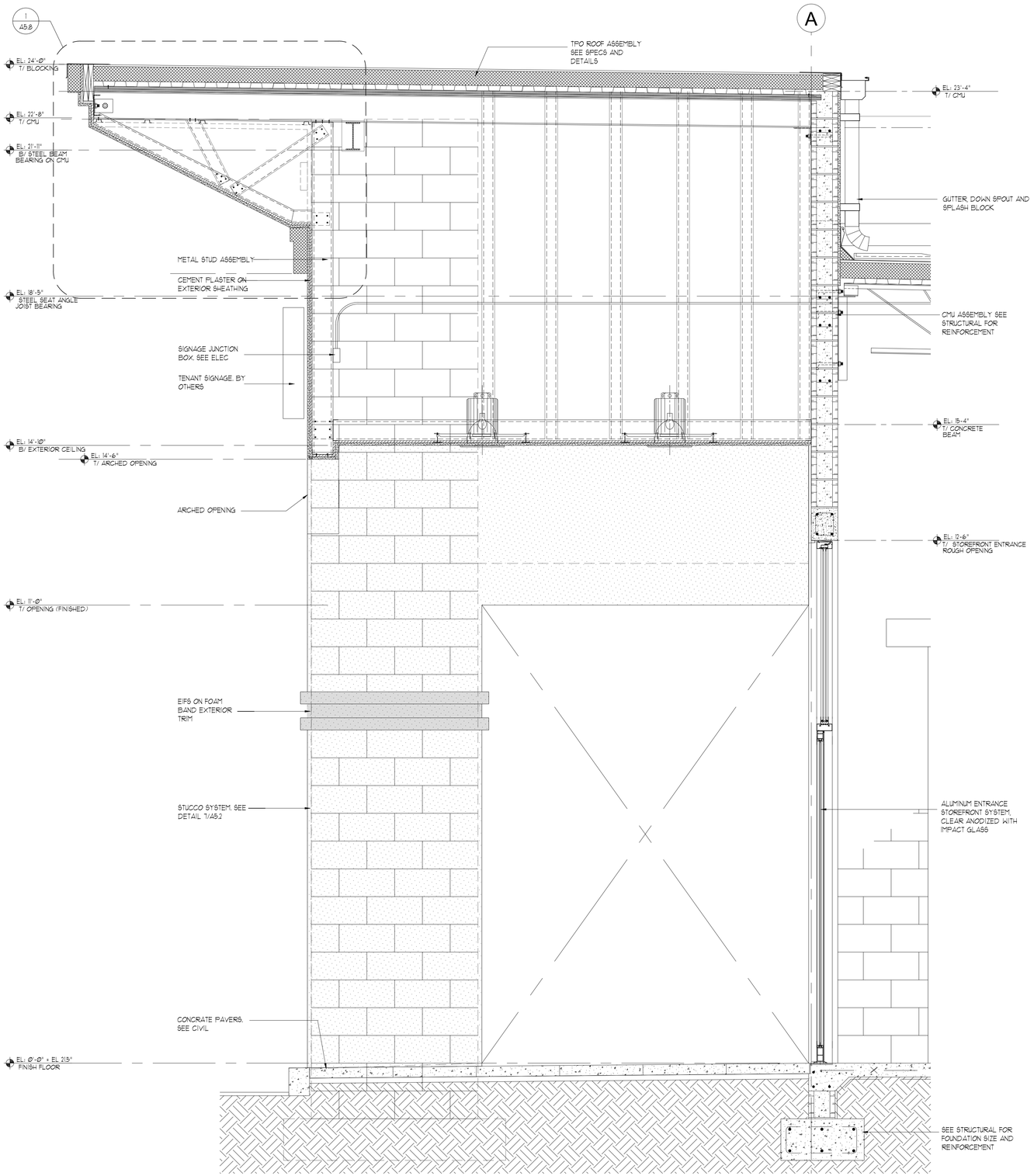

1 A5.4 WALL SECTION
SCALE: 3/4" = 1'-Ø"

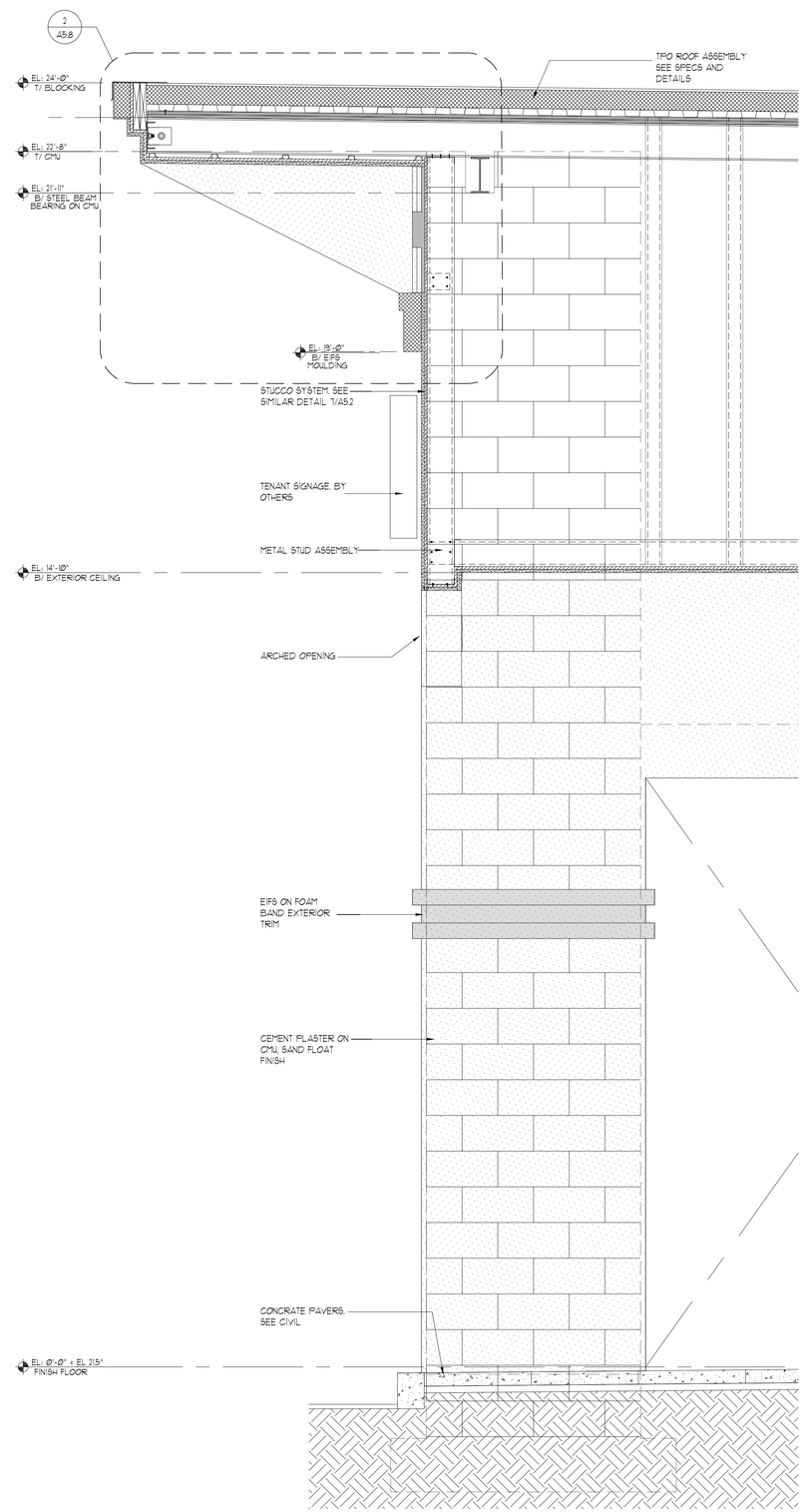

2 A5.4 WALL SECTION
SCALE: 3/4" = 1'-Ø"

THIS DOCUMENT CONTAINS COPYRIGHTED MATERIAL AND TRADE SECRET INFORMATION BELONGING EXCLUSIVELY TO WILLIAMSON DACAR ASSOCIATES, INC. ANY UNAUTHORIZED USE, DISCLOSURE, DISSEMINATION OR DUPLICATION OF ANY OF THE INFORMATION CONTAINED HEREIN MAY RESULT IN LIABILITY UNDER APPLICABLE LAWS.

WILLIAMSON DACAR ASSOCIATES
Architecture / Engineering / Planning
ARCHITECTURE / ENGINEERING / PLANNING
15590 CLEARWATER DRIVE, SUITE 106
CLEARWATER, FLORIDA 33760
PH (727) 725-0951 www.williamsondacar.com

Architect: AA 0002541
Engineering: EB 0006884

WELLINGTON GREEN PARCEL "F"
PHASE II RETAIL "H" MODIFICATION
PETITION NO. 16-18 (2016-08 ASA 53)
2545 SOUTH STATE ROAD 7
WELLINGTON, FLORIDA 33414

Revisions of Drawings

No.	Date	Revisions

Issues of Drawings

No.	Date	Issues
1	06.15.16	100%CD – PERMIT SET

Phase:
Checked:
Drawn: JA

Drawing Tiltle

WALL SECTIONS

WDA Proj. No.: 1526-01
Owner Proj. No.:
Scale: AS NOTED

Sheet No.

A5.4

No. of Sheets.:

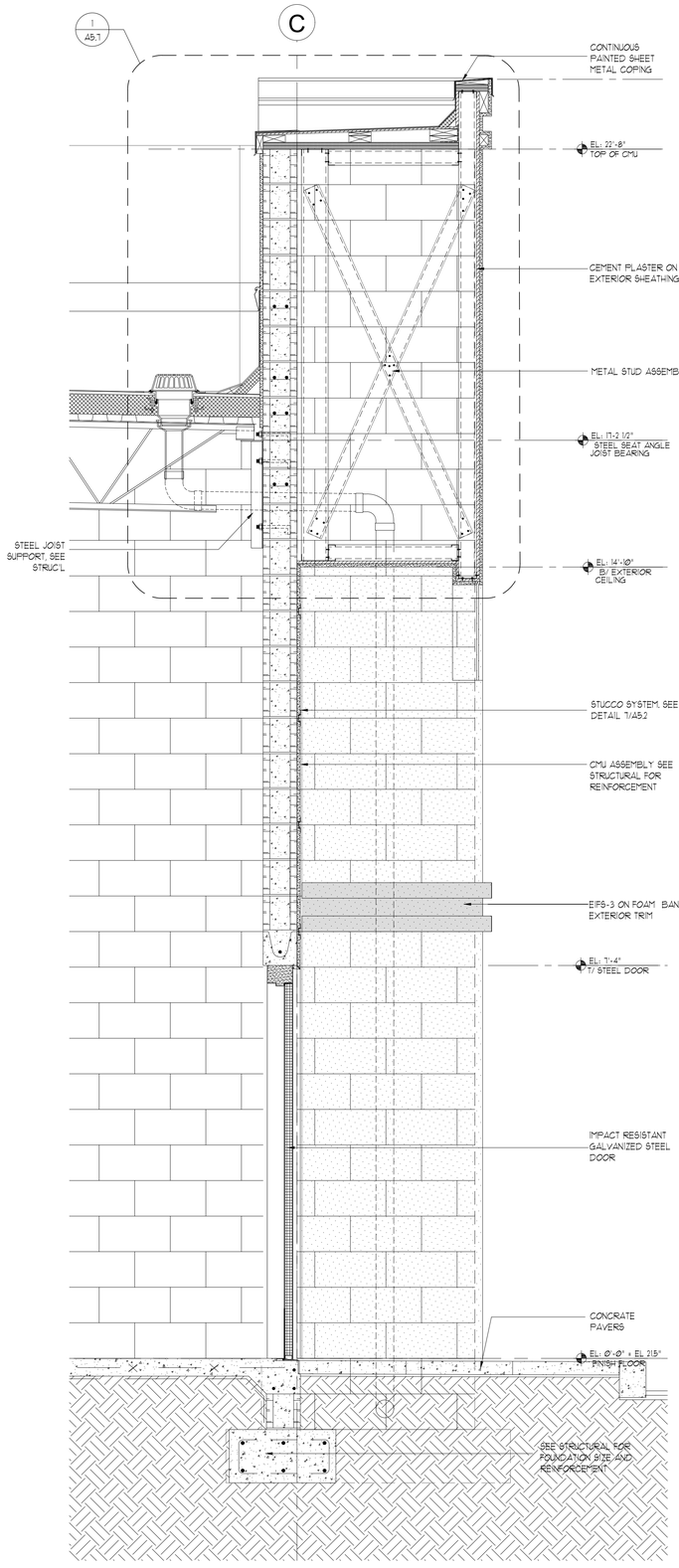

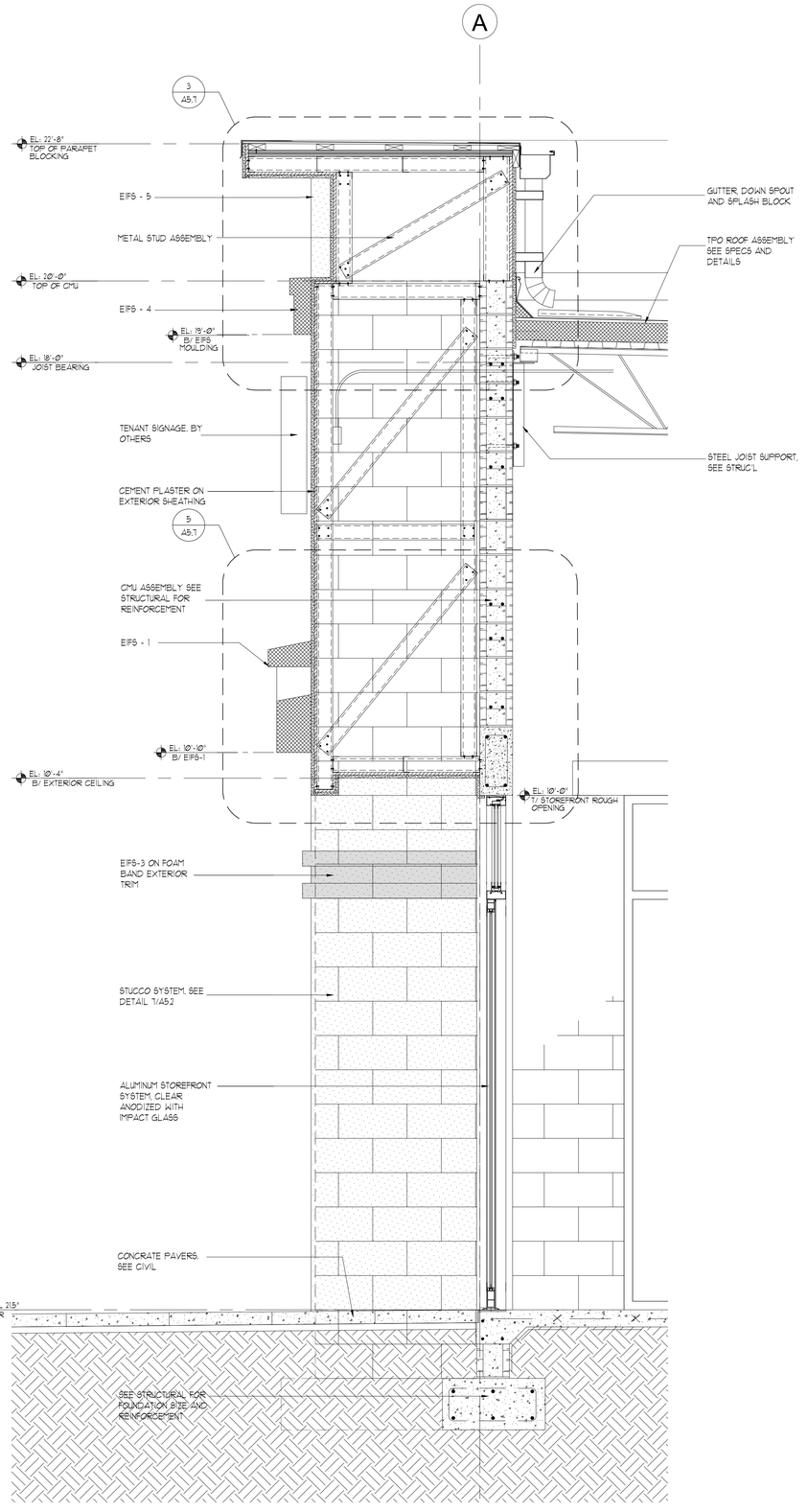

1 A5.5 WALL SECTION
SCALE: 3/4" = 1'-Ø"

2 A5.5 WALL SECTION
SCALE: 3/4" = 1'-Ø"

THIS DOCUMENT CONTAINS COPYRIGHTED MATERIAL AND TRADE SECRET INFORMATION BELONGING EXCLUSIVELY TO WILLIAMSON DACAR ASSOCIATES, INC. ANY UNAUTHORIZED USE, DISCLOSURE, DISSEMINATION OR DUPLICATION OF ANY OF THE INFORMATION CONTAINED HEREIN MAY RESULT IN LIABILITY UNDER APPLICABLE LAWS.

WILLIAMSON DACAR ASSOCIATES
Architecture / Engineering / Planning
ARCHITECTURE / ENGINEERING / PLANNING
15900 GLADE HAVEN DRIVE SUITE 106
LAKEWOOD RANCH, FL 34202
PH (727) 725-0951 www.williamsondacar.com

Architect: AA 0002541
Engineering: EB 0006884

WELLINGTON GREEN PARCEL "F"
PHASE II RETAIL "H" MODIFICATION
PETITION NO. 16-18 (2016-08 ASA 53)
2545 SOUTH STATE ROAD 7
WELLINGTON, FLORIDA 33414

Revisions of Drawings

No.	Date	Revisions

Issues of Drawings

No.	Date	Issues
1	06.15.16	100% CD – PERMIT SET

Phase:
Checked:
Drawn: JA

Drawing Tiltle
WALL SECTIONS

WDA Proj. No.: 1526-01
Owner Proj. No.:
Scale: AS NOTED

Sheet No.
A5.5

No. of Sheets:

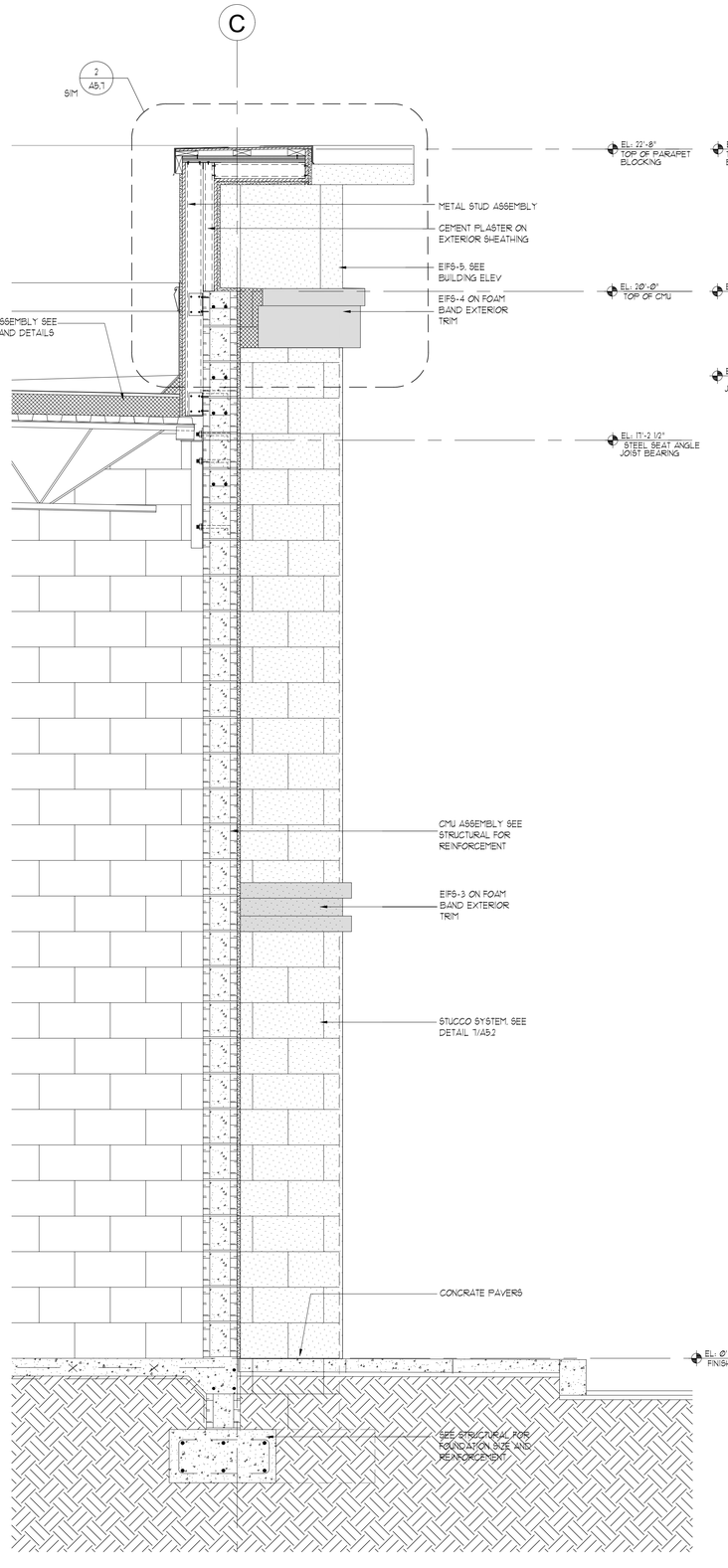

1 A5.6 WALL SECTION
SCALE: 3/4" = 1'-0"

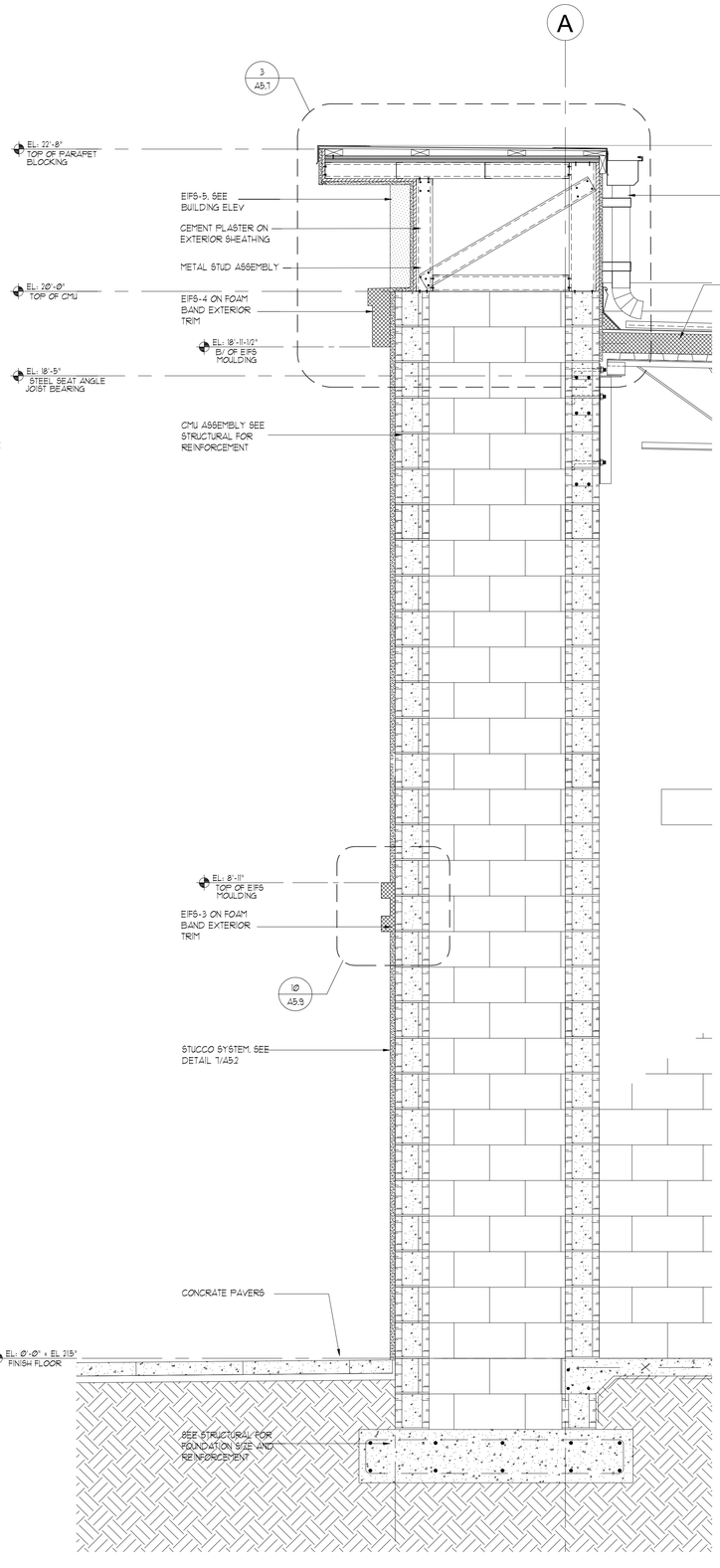

2 A5.6 WALL SECTION
SCALE: 3/4" = 1'-0"

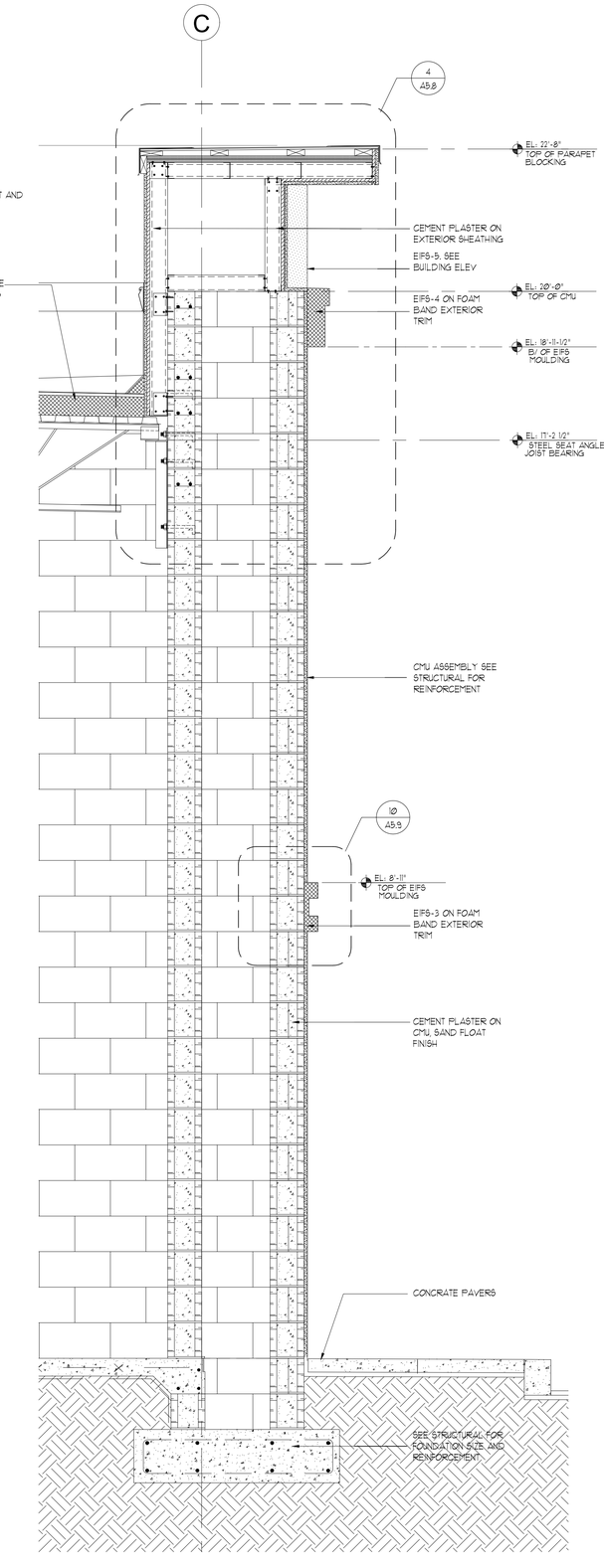

3 A5.6 WALL SECTION
SCALE: 3/4" = 1'-0"

THIS DOCUMENT CONTAINS COPYRIGHTED MATERIAL AND TRADE SECRET INFORMATION BELONGING EXCLUSIVELY TO WILLIAMSON DACAR ASSOCIATES, INC. ANY UNAUTHORIZED USE, DISCLOSURE, DISSEMINATION OR DUPLICATION OF ANY OF THE INFORMATION CONTAINED HEREIN MAY RESULT IN LIABILITY UNDER APPLICABLE LAWS.

WILLIAMSON DACAR ASSOCIATES
Architecture / Planning / Engineering
ARCHITECTURE / ENGINEERING / PLANNING
15990 CLEAR WATER DRIVE SUITE 106
LAKE WORTH, FL 33467
PH (727) 725-0951 www.williamsondacar.com

Architect: AA 0002541
Engineering: EB 0006884

WELLINGTON GREEN PARCEL "F"
PHASE II RETAIL "H" MODIFICATION
PETITION NO. 16-18 (2016-08 ASA 53)
2545 SOUTH STATE ROAD 7
WELLINGTON, FLORIDA 33414

Revisions of Drawings

No.	Date	Revisions

Issues of Drawings

No.	Date	Issues
1	06.15.16	100% CD – PERMIT SET

Phase:
Checked:
Drawn: JA

Drawing Tiltle
WALL SECTIONS

WDA Proj. No.: 1526-01
Owner Proj. No.:
Scale: AS NOTED

Sheet No.
A5.6
No. of Sheets.:

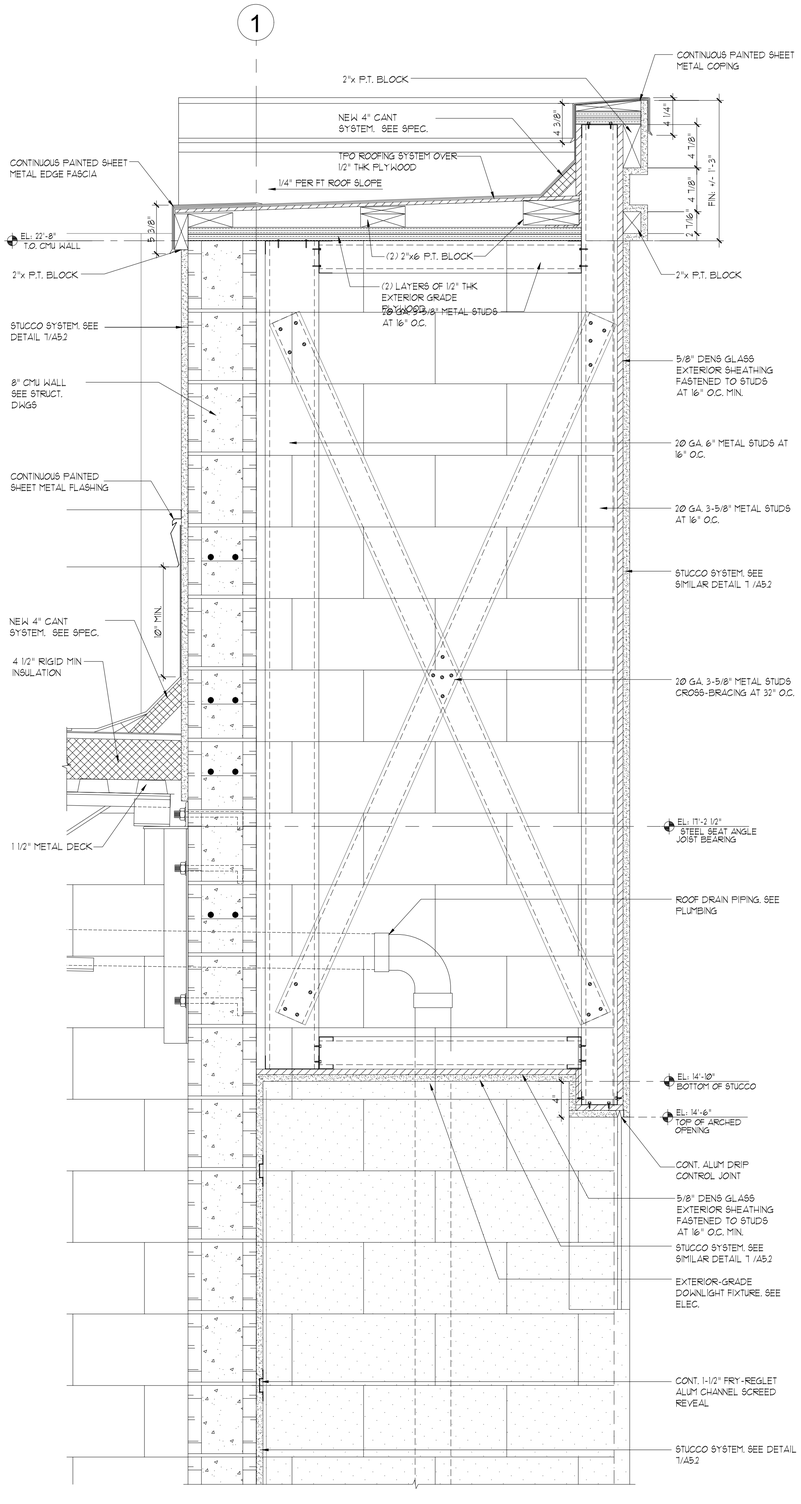

1 A5.1 WALL SECTION DETAIL
SCALE= 1 1/2" = 1'-0"

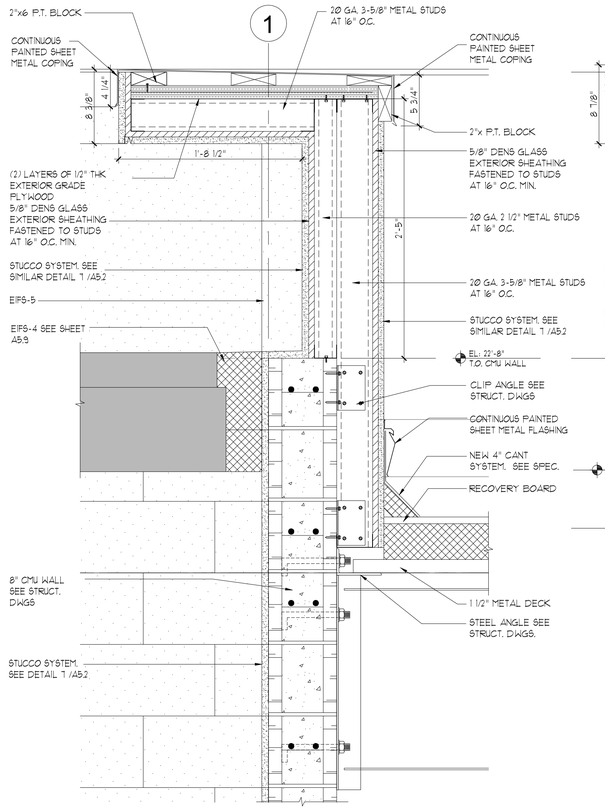

2 A5.1 WALL SECTION DETAIL
SCALE= 1 1/2" = 1'-0"

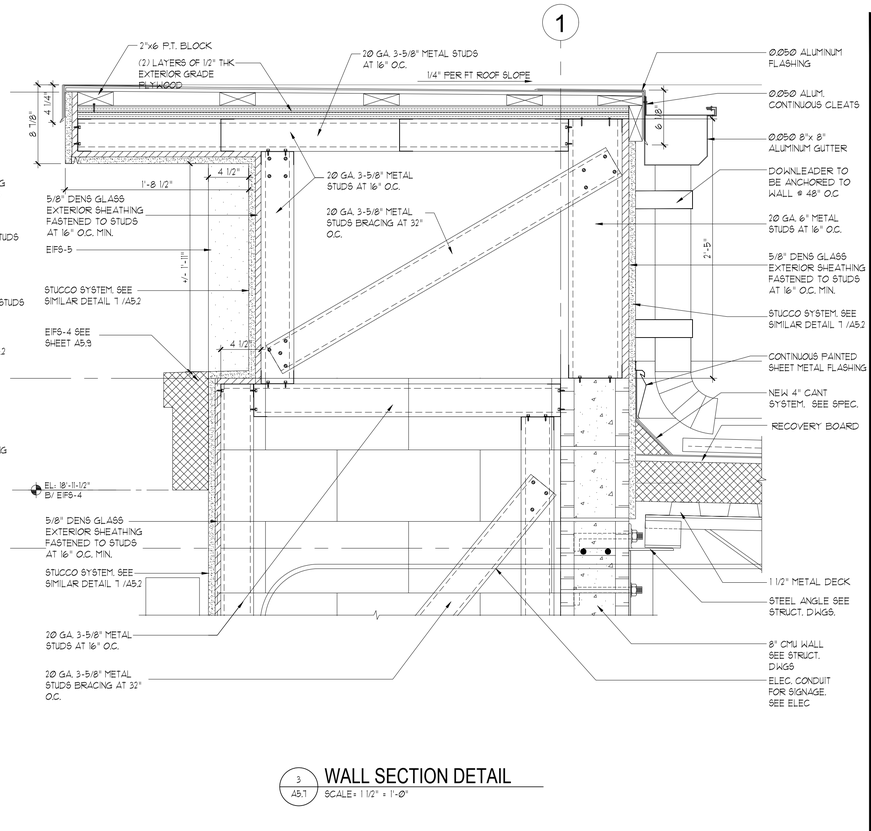

3 A5.1 WALL SECTION DETAIL
SCALE= 1 1/2" = 1'-0"

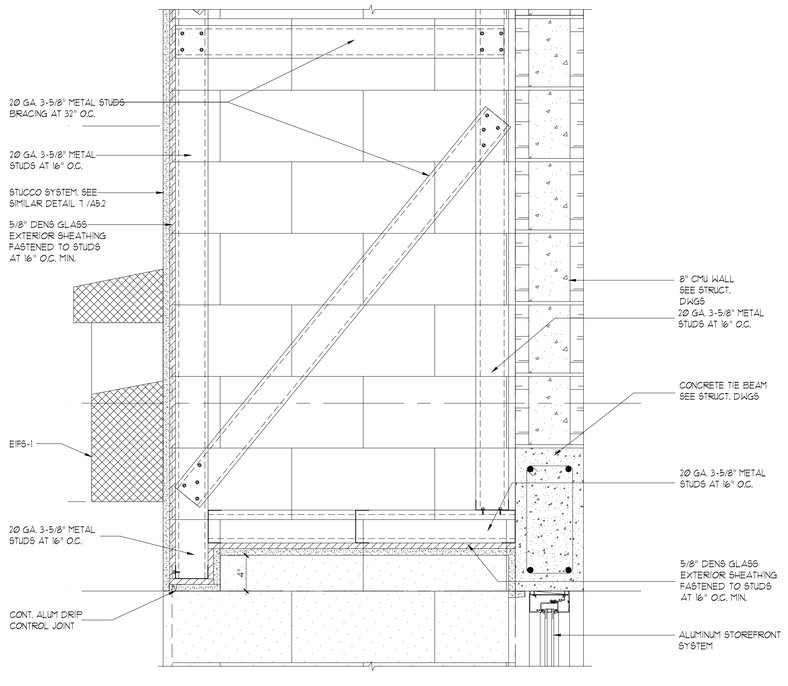

4 A5.1 WALL SECTION DETAIL
SCALE= 1 1/2" = 1'-0"

THIS DOCUMENT CONTAINS COPYRIGHTED MATERIAL AND TRADE SECRET INFORMATION BELONGING EXCLUSIVELY TO WILLIAMSON DACAR ASSOCIATES, INC. ANY UNAUTHORIZED USE, DISCLOSURE, DISSEMINATION OR DUPLICATION OF ANY OF THE INFORMATION CONTAINED HEREIN MAY RESULT IN LIABILITY UNDER APPLICABLE LAWS.

WILLIAMSON DACAR ASSOCIATES
Architecture / Engineering / Planning
ARCHITECTURE / ENGINEERING / PLANNING
15900 LIGHTWAVE DRIVE SUITE 106
CLEARWATER, FL 33760
PH (727) 524-1818 www.williamsondacar.com
Architect: AA 0002541
Engineering: EB 0006884

WELLINGTON GREEN PARCEL "F"
PHASE II RETAIL "H" MODIFICATION
PETITION NO. 16-18 (2016-08 ASA 53)
2545 SOUTH STATE ROAD 7
WELLINGTON, FLORIDA 33414

Revisions of Drawings

No.	Date	Revisions

Issues of Drawings

No.	Date	Issues
1	6-15-16	100% CD – Permit Set

Phase:
Checked:
Drawn: JA

Drawing Title
WALL DETAILS

WDA Proj. No.: 1526-01
Owner Proj. No.:
Scale: AS NOTED

Sheet No.
A5.7
No. of Sheets.:

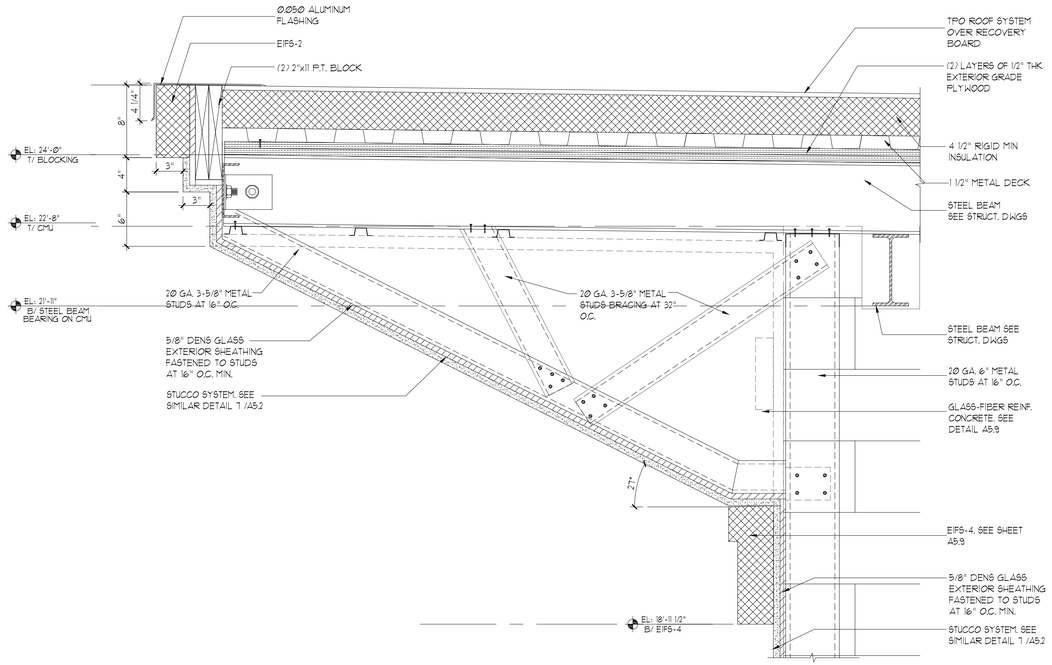

1 A5.8 **WALL SECTION DETAIL**
SCALE: 1 1/2" = 1'-0"

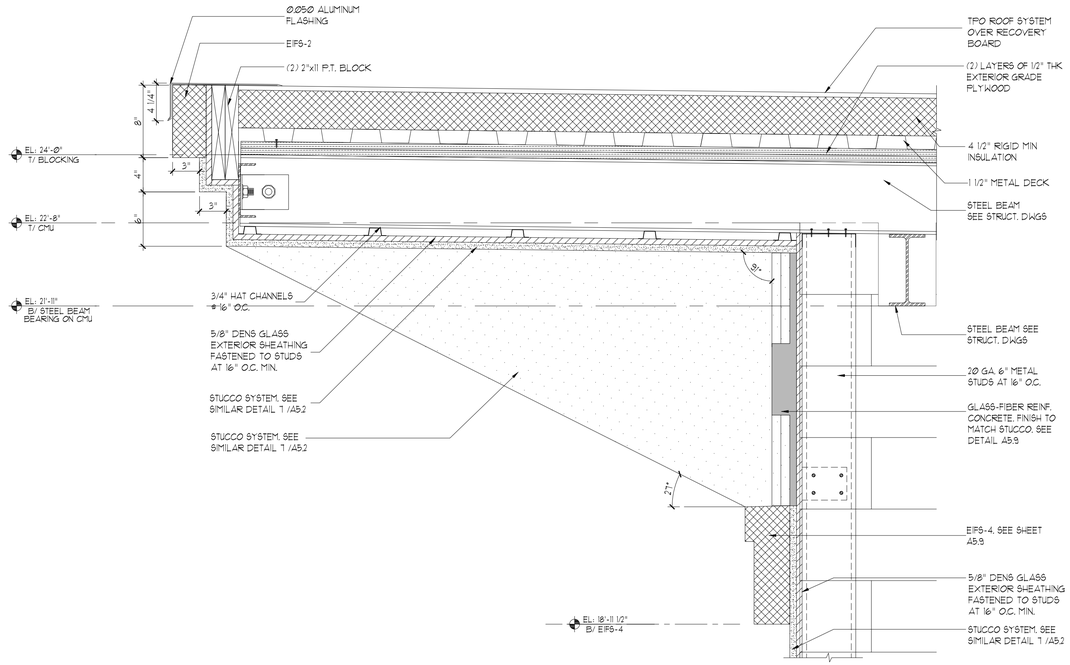

2 A5.8 **WALL SECTION DETAIL**
SCALE: 1 1/2" = 1'-0"

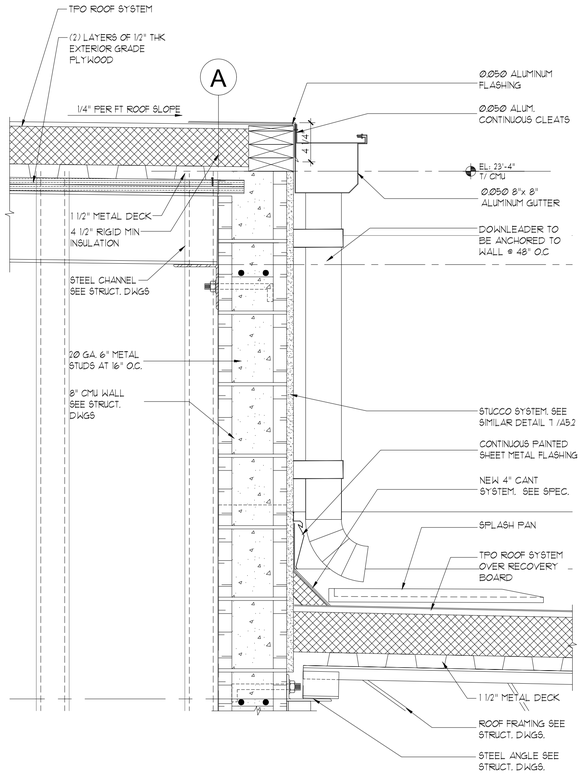

3 A5.8 **WALL SECTION DETAIL**
SCALE: 1 1/2" = 1'-0"

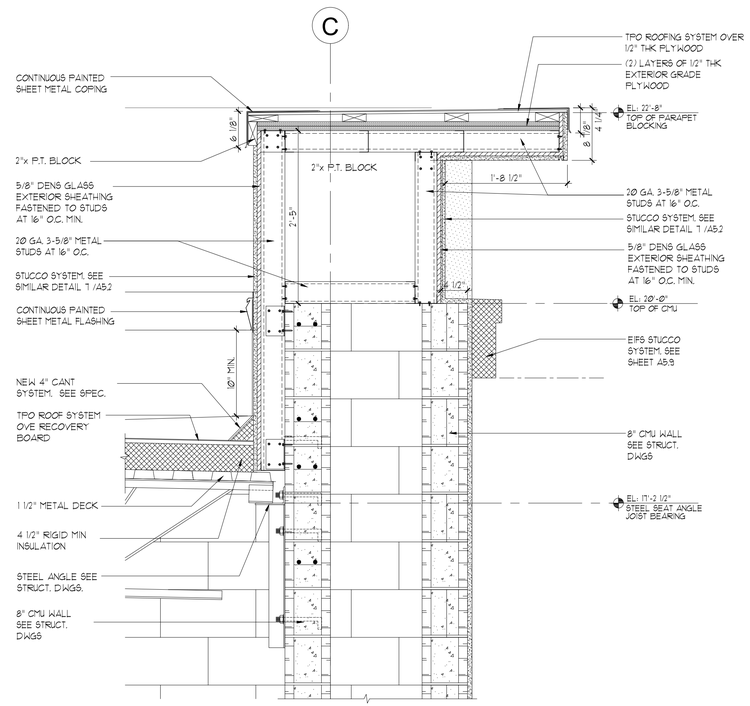

4 A5.8 **WALL SECTION DETAIL**
SCALE: 1" = 1'-0"

THIS DOCUMENT CONTAINS COPYRIGHTED MATERIAL AND TRADE SECRET INFORMATION BELONGING EXCLUSIVELY TO WILLIAMSON DACAR ASSOCIATES, INC. ANY UNAUTHORIZED USE, DISCLOSURE, DISSEMINATION OR DUPLICATION OF ANY OF THE INFORMATION CONTAINED HEREIN MAY RESULT IN LIABILITY UNDER APPLICABLE LAWS.

WILLIAMSON DACAR ASSOCIATES
Architecture / Engineering / Interiors
ARCHITECTURE / ENGINEERING / PLANNING
11500 LIGHTWAVE DRIVE SUITE 106
PH (727) 524-8383 www.williamsondacar.com
Architect: AA 0002541
Engineering: EB 0006884

WELLINGTON GREEN PARCEL "F"
PHASE II RETAIL "H" MODIFICATION
PETITION NO. 16-18 (2016-08 ASA 53)
2545 SOUTH STATE ROAD 7
WELLINGTON, FLORIDA 33414

Revisions of Drawings

No.	Date	Revisions

Issues of Drawings

No.	Date	Issues
1	6-15-16	100% CD - Permit Set

Phase:
Checked:
Drawn: JA

Drawing Title: WALL DETAILS

WDA Proj. No.: 1526-01
Owner Proj. No.:
Scale: AS NOTED

Sheet No.: A5.8
No. of Sheets:

1 A5.9 NOT USED
SCALE: 3" = 1'-0"

2 A5.9 NOT USED
SCALE: 3" = 1'-0"

3 A5.9 NOT USED
SCALE: 3" = 1'-0"

4 A5.9 NOT USED
SCALE: 3" = 1'-0"

5 A5.9 NOT USED
SCALE: 3" = 1'-0"

6 A5.9 NOT USED
SCALE: 3" = 1'-0"

7 A5.9 NOT USED
SCALE: 3" = 1'-0"

7 A5.9 NOT USED
SCALE: 3/4" = 1'-0"

8 A5.9 NOT USED
SCALE: 3" = 1'-0"

9 A5.9 NOT USED
SCALE: 3" = 1'-0"

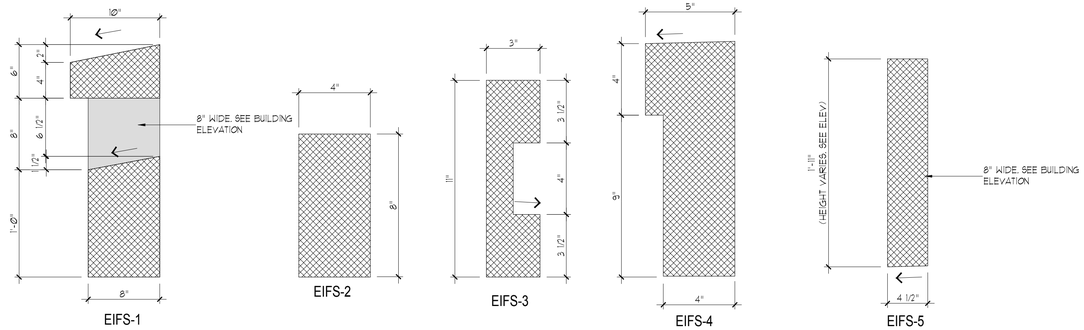

10 A5.9 EIFS EXTERIOR TRIMS
SCALE: NTS

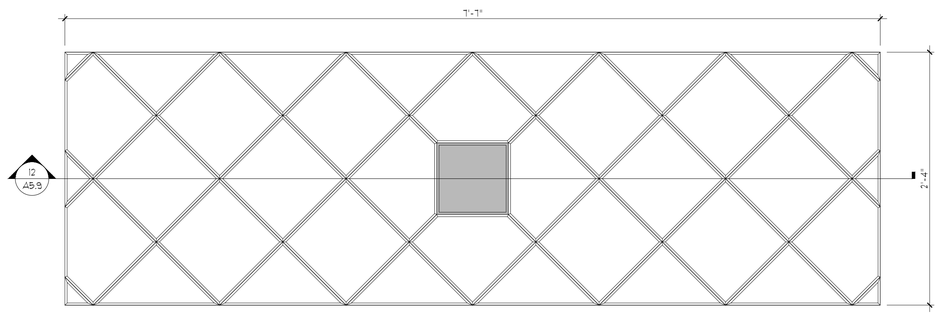

11 A5.9 GLASS FIBER REINFORCED CONCRETE (GFRC) EXTERIOR TRIM
SCALE: 1-1/2" = 1'-0"

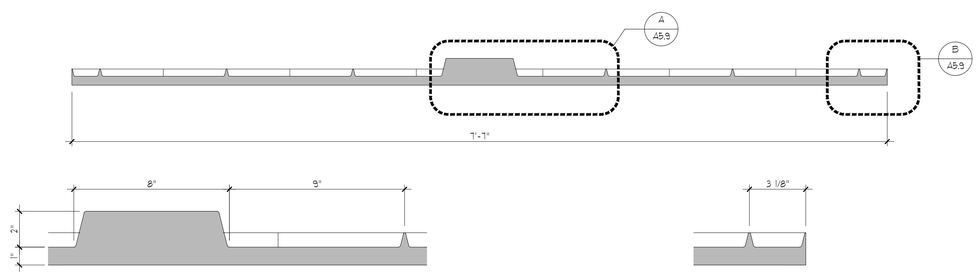

A A5.8 SECTION DETAIL
SCALE: 3" = 1'-0"

B A5.8 SECTION DETAIL
SCALE: 3" = 1'-0"

12 A5.9 GFRC) EXTERIOR TRIM - SECTION DETAILS
SCALE: 3" = 1'-0"

THIS DOCUMENT CONTAINS COPYRIGHTED MATERIAL AND TRADE SECRET INFORMATION BELONGING EXCLUSIVELY TO WILLIAMSON DACAR ASSOCIATES, INC. ANY UNAUTHORIZED USE, DISCLOSURE, DISSEMINATION OR DUPLICATION OF ANY OF THE INFORMATION CONTAINED HEREIN MAY RESULT IN LIABILITY UNDER APPLICABLE LAWS.

WILLIAMSON DACAR ASSOCIATES
Architecture Planning Engineering
ARCHITECTURE / ENGINEERING / PLANNING
15500 LIGHTWAVE DRIVE SUITE 106
CLEARWATER, FL. 33760
PH (727) 725-0951 www.williamsondacar.com

Architect: AA 0002541
Engineering: EB 0006884

WELLINGTON GREEN PARCEL "F"
PHASE II RETAIL "H" MODIFICATION
PETITION NO. 16-18 (2016-08 ASA 53)
2545 SOUTH STATE ROAD 7
WELLINGTON, FLORIDA 33414

Revisions of Drawings

No.	Date	Revisions

Issues of Drawings

No.	Date	Issues
1	06.15.16	100%CD – PERMIT SET

Phase:
Checked:
Drawn: JA

Drawing Tiltle
TYPICAL DETAILS

WDA Proj. No.: 1526-01
Owner Proj. No.:
Scale: AS NOTED

Sheet No.
A5.9
No. of Sheets.:

DOOR TYPES

ASSUME STANDING OUTSIDE OF ROOM

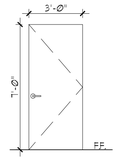

TYPE : A
GALVANIZED STEEL HOLLOW METAL DOOR, IMPACT RESISTANT
N.O.A. #12-0223.29
FL#

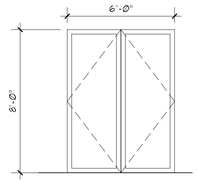

TYPE : AL1
ALUMINUM OUTSWING ENTRANCE DOOR, IMPACT RESISTANT & BLAST MITIGATION
YKK AP AMERICA INC., SERIES 35H
FL#16554.1

GENERAL NOTES

DOOR NOMENCLATURE

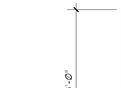

1. REFER TO FINISH HARDWARE SPEC. FOR HARDWARE SET NUMBERS
2. REFER TO MECH. DWG TO LOCATE DOORS WITH UNDERCUT.
3. REFER TO MECH. DWG FOR ACTUAL SIZES OF LOUVERS.
4. GLAZING: GLASS IN ENTRANCES & STOREFRONTS SHALL BE FULLY TEMPERED (FT) SAFETY TYPE.
5. WOOD DOORS SHALL HAVE LIFETIME GUARANTEE. GUARANTEE TO INCLUDE REHANGING OF DOORS AT NO COST TO THE UNIVERSITY.
6. ALL EXTERIOR FRAMES MUST BE WEATHER-STRIPPED.
7. ALL DOORS IN A FIRE RATED WALL ASSEMBLY IS TO RECEIVED DOOR CLOSER

ABREVIATIONS

WD	WOOD DOOR - SOLID CORE
GHM / GALV.	GALVANIZED HOLLOW METAL
HM	HOLLOW METAL
AL / ALUM	ALUMINUM STOREFRONT
FF	FACTORY FINISH
P	PAINTED
MS	MANUFACTURER STANDARD
AD	AUTOMATIC DOOR OPENER FOR ADA
CR	CARD READER
ES	ELECTRIC STRIKE
RM	ROOM NUMBER
PR	PAIR
PH	PANIC HARDWARE
IR	IMPACT RATED
CTG	CLEAR TEMPERED GLASS
IRLG	IMPACT RATED LAMINATED GLASS
TG	TEMPERED GLASS
FRW	FIRE RATED WALL WITH 60M LABEL ON DOORS & FRAMES, U.O.N.
SRW	SMOKE RATED WALL WITH 20M LABEL ON DOORS & FRAMES, U.O.N.
EXIST	EXISTING DOOR/FRAME TO REMAIN

DOOR FRAME TYPES

ASSUME STANDING OUTSIDE OF ROOM

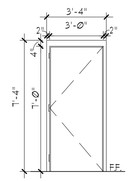

TYPE : GHM1
GALV. HM FRAME IMPACT RESISTANT
N.O.A. 03-0812.07
FL#493.1

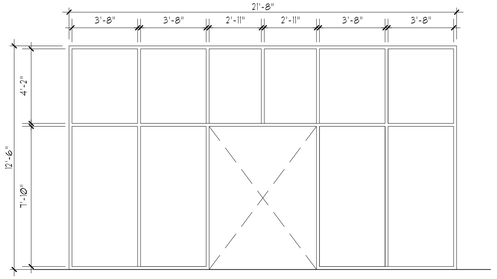

TYPE : AL2
ALUMINUM STOREFRONT FRAME, IMPACT RESISTANT & BLAST MITIGATION
YKK AP AMERICA INC., SERIES YHS 50 TU
FL#14218.R6

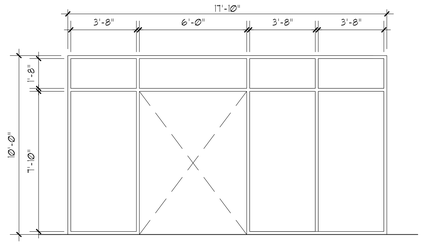

TYPE : AL3
ALUMINUM STOREFRONT FRAME, IMPACT RESISTANT & BLAST MITIGATION
YKK AP AMERICA INC., SERIES YHS 50 TU
FL#14218.R6

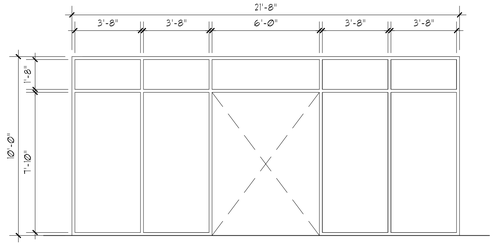

TYPE : AL4
ALUMINUM STOREFRONT FRAME, IMPACT RESISTANT & BLAST MITIGATION
YKK AP AMERICA INC., SERIES YHS 50 TU
FL#14218.R6

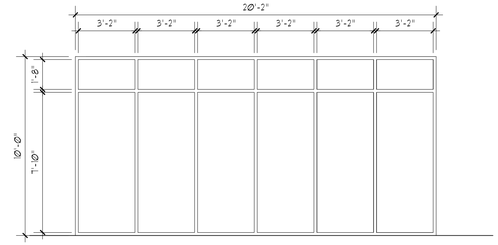

TYPE : AL5
ALUMINUM STOREFRONT FRAME, IMPACT RESISTANT & BLAST MITIGATION
YKK AP AMERICA INC., SERIES YHS 50 TU
FL#14218.R6

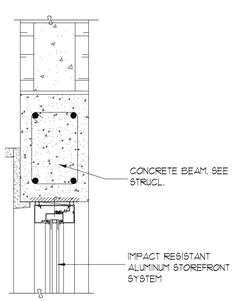

H-1 ALUMINUM HEAD - DOOR

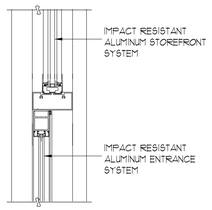

H-1A ALUMINUM MULLION - DOOR

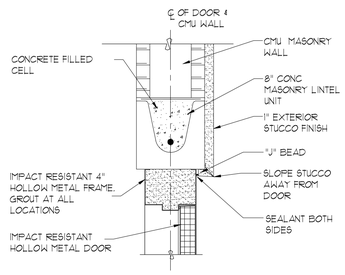

H-2 HOLLOW METAL HEAD - DOOR

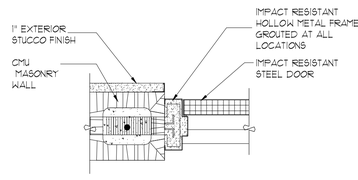

J-2 HOLLOW METAL JAMB - DOOR

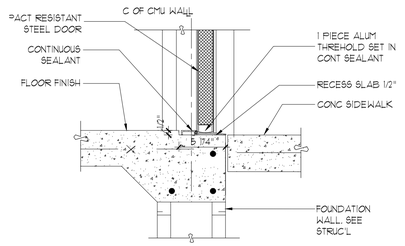

S-2 HOLLOW METAL - DOOR

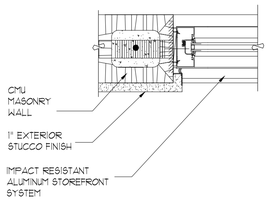

J-1 ALUMINUM - JAMB

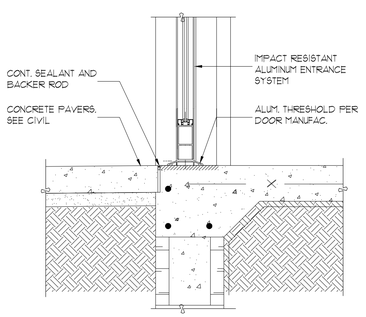

S-1 ALUMINUM SILL - DOOR

HARDWARE SET 1

DOOR REAR EXIT DOOR

QUAN.	DESCRIPTION	MODEL NUMBER	FINISH	MANUF.
3	HINGE (HEAVY WEIGHT)	TA2314 x NRP4-4 1/2" x 4 1/2"	US32D	MK
1	EXIT DEVIE (EXIT ONLY)	HC4388Ø	US32D	SA
1	DOOR CLOSER	1431 CPS	EN	SA
1	KICK PLATE	KØ8SØ 8" x 2" LDW	US32D	RO
1	THRESHOLD	2005AV x DOOR WIDTH		PE
1	RAIN GUARD	346C x DOOR WIDTH PLUS 4"		PE
1	GASKETING	303CS HEAD & JAMBS		PE
1	SWEEP	315CN x DOOR WIDTH		PE

NOTE: EXTERIOR DOORS AND HARDWARE TO COMPLY WITH FBC WINDSTORM REQUIREMENTS

MANUFACTURER LEGEND:
MK: McKINNEY PRODUCTS
RO: ROCKWOOD MANUFACTURING
PE: PEMKO MANUFACTURING
SA: SARGENT

DOOR AND FRAME SCHEDULE

	DOOR									FRAME							HARDWARE SET	
ROOM NAME	DOOR NO.	SIZE WIDTH	SIZE HEIGHT	MAT	TYPE	FINISH	GLASS	LABEL	UC	MAT	TYPE	HEAD	JAMB	SILL	GLASS	LABEL		REMARKS
RETAIL 1	1A	PR 3'-Ø"	7'-Ø"	ALUM	AL1	FF	1" INSULATED	-	-	AL	AL3	H-1	J-1	S-1	1" INSULATED	-		HARDWARE FROM DOOR MANUF.
RETAIL 1	1B	3'-Ø"	7'-Ø"	GHM	A	FF	-	-	-	GHM	GHM1	H-2	J-2	S-2		-	1	
RETAIL 2	2A	PR 3'-Ø"	7'-Ø"	ALUM	AL1	FF	1" INSULATED	-	-	AL	AL2	H-1	J-1	S-1	1" INSULATED	-		HARDWARE FROM DOOR MANUF.
RETAIL 2	2B	3'-Ø"	7'-Ø"	GHM	A	FF	-	-	-	GHM	GHM1	H-2	J-2	S-2		-	1	
RETAIL 3	3A	PR 3'-Ø"	7'-Ø"	ALUM	AL1	FF	1" INSULATED	-	-	AL	AL4	H-1	J-1	S-1	1" INSULATED	-		HARDWARE FROM DOOR MANUF.
RETAIL 3	3B	3'-Ø"	7'-Ø"	GHM	A	FF	-	-	-	GHM	GHM1	H-2	J-2	S-2		-	1	
RETAIL 4	4A	PR 3'-Ø"	7'-Ø"	ALUM	AL1	FF	1" INSULATED			AL	AL4	H-1	J-1	S-1	1" INSULATED			HARDWARE FROM DOOR MANUF.
RETAIL 4	4B	3'-Ø"	7'-Ø"	GHM	A	FF	-			GHM	GHM1	H-2	J-2	S-2			1	
RETAIL 5	5A	PR 3'-Ø"	7'-Ø"	ALUM	AL1	FF	1" INSULATED			AL	AL2	H-1	J-1	S-1	1" INSULATED			HARDWARE FROM DOOR MANUF.
RETAIL 5	5B	3'-Ø"	7'-Ø"	GHM	A	FF	-			GHM	GHM1	H-2	J-2	S-2			1	
RETAIL 6	6A	PR 3'-Ø"	7'-Ø"	ALUM	AL1	FF	1" INSULATED			AL	AL3 Opp.	H-1	J-1	S-1	1" INSULATED			HARDWARE FROM DOOR MANUF.
RETAIL 6	6B	3'-Ø"	7'-Ø"	GHM	A	FF	-			GHM	GHM1	H-2	J-2	S-2			1	

THIS DOCUMENT CONTAINS COPYRIGHTED MATERIAL AND TRADE SECRET INFORMATION BELONGING EXCLUSIVELY TO WILLIAMSON DACAR ASSOCIATES, INC. ANY UNAUTHORIZED USE, DISCLOSURE, DISSEMINATION OR DUPLICATION OF ANY OF THE INFORMATION CONTAINED HEREIN MAY RESULT IN LIABILITY UNDER APPLICABLE LAWS

WILLIAMSON DACAR ASSOCIATES
Architecture / Planning / Engineering
ARCHITECTURE / ENGINEERING / PLANNING
15590 CLEARWATER DRIVE SUITE 106
PH (727) 725-0951 www.williamsondacar.com

Architect: AA 0002541
Engineering: EB 0006884

WELLINGTON GREEN PARCEL "F"
PHASE II RETAIL "H" MODIFICATION
PETITION NO. 16-18 (2016-08 ASA 53)
2545 SOUTH STATE ROAD 7
WELLINGTON, FLORIDA 33414

Revisions of Drawings

No.	Date	Revisions

Issues of Drawings

No.	Date	Issues
1	06.15.16	100%CD – PERMIT SET

Phase:
Checked:
Drawn: BDL

Drawing Tittle

DOOR & WINDOW SCHEDULE

WDA Proj. No.: 1526-01
Owner Proj. No.:
Scale: AS NOTED

Sheet No.
A7.1
No. of Sheets.:

(CONT.) EXITING REQUIREMENTS - MEANS OF EGRESS

	FLORIDA BUILDING CODE	NFPA 101 - LIFE SAFETY CODE	DESIGNED
EXIT ILLUMINATION	SECTION 1006.1 ILLUMINATION LEVEL = 1 FOOTCANDLE SECTION 1006.3 IN THE EVENT OF POWER SUPPLY FAILURE, AN EMERGENCY ELECTRICAL SYSTEM SHALL AUTOMATICALLY ILLUMINATE ALL OF THE FOLLOWING AREAS: - AISLES AND UNENCLOSED EGRESS STAIRWAYS THAT REQUIRE TWO OR MORE MEANS OF EGRESS - INTERIOR EXIT DISCHARGE ELEMENTS IN BUILDINGS REQUIRED TO HAVE TWO OR MORE EXITS	CHAPTER 7.8.1.3 FLOORS & WALKING SURFACE = MIN. 1 FT-CANDLE	SEE LIFE-SAFETY PLANS FOR EMERGENCY POWER LOCATIONS

INTERIOR ENVIRONMENT - FLBC CHAPTER 12

SECTION 1207.2 - SOUND TRANSMISSION

EACH FUTURE TENANT SPACE SHALL BE ATTENUATED FOR SOUND CONTROL, MINIMAL REVERBERATION AND ECHO; STC RATING 50 STC

FIXTURE COUNT: ASSEMBLY A-3 OCCUPANCY - FBC PLUMBING 2014, CHAPTER 4, TABLE 403.1

NEW & EXISTING SPACES		WATER CLOSET / URINAL		LAVATORIES		DRINKING FOUNTAINS
		MALE	FEMALE	MALE	FEMALE	
MERCANTILE OCCUPANCY LOAD: 50 PER TENANT SPACE (25 FEMALE, 25 MALE)	RATIO	1 PER 500	1 PER 500	1 PER 750		1 PER 1,000
TOTAL FIXTURE REQUIRED		1 WC	1 WC	1 LAV		1
TOTAL FIXTURE DESIGNED		1 WC / TENANT SPACE		1 LAV / TENANT SPACE		1 LAV / TENANT SPACE

GENERAL NOTES:

1. FBC SECTION 410 DRINKING FOUNTAINS - WHERE WATER IS SERVED IN CAFE/RESTAURANTS, DRINKING FOUNTAINS SHALL NOT BE REQUIRED. IN OTHER OCCUPANCIES, WHERE DRINKING FOUNTAINS ARE REQUIRED, WATER COOLERS OR BOTTLED WATER DISPENSERS SHALL BE PERMITTED TO BE SUBSTITUTED FOR NOT MORE THAN 50 PERCENT OF THE REQUIRED DRINKING FOUNTAINS.

FIRE PROTECTION SYSTEMS - CHAPTER 9

SECTION 901.2 FIRE PROTECTION SYSTEMS. FIRE PROTECTION SYSTEMS SHALL BE INSTALLED, REPAIRED, OPERATED AND MAINTAINED IN ACCORDANCE WITH FL CODE 2014 AND THE FLORIDA FIRE PREVENTION CODE.

SECTION 903.2.1 AUTOMATIC SPRINKLER SYSTEM GROUP A. SHALL BE PROVIDED THROUGHOUT BUILDINGS AND PORTIONS THEREOF USED AS GROUP A-3 OCCUPANCIES.

	FLORIDA BUILDING CODE	FIRE CODE NFPA 1 / NFPA 101	DESIGNED
FIRE PROTECTION SYSTEMS AUTOMATIC SPRINKLER SYSTEMS GROUP M MERCANTILE AUTOMATIC SPRINKLER NOT REQUIRED	SECTION 903.2.7 GROUP M MERCANTILE REQUIRED AT: - FIRE AREA EXCEEDS 12,000 SF. - OCCUPANT USE FOR DISPLAY USE FOR FURNITURE & MATTRESSES EXCEEDS 5000 OR MORE - FIRE AREA IS LOCATED MORE THAN 3-STORIES ABOVE GRADE	NFPA 1 CHAPTER 13.3.2.21 NEW MERCANTILE OCCUPANCIES REQUIRED AT: - 3 OR MORE STORIES IN HEIGHT. - EXCEEDING 12,000 SQFT GROSS AREA - STORIES BELOW LEVEL OF EXIT DISCHARGE EXCEEDING 2,500 SQFT - THROUGHOUT MULTIPLE OR MIXED OCCUPANCIES	DESIGNED WITH AUTOMATIC SPRINKLER SYSTEM THROUGHOUT

	FLORIDA BUILDING CODE	FIRE CODE NFPA 1 / NFPA 101	DESIGNED
PORTABLE FIRE EXTINGUISHERS GROUP M MERCANTILE	SECTION 906.1 PORTABLE FIRE EXTINGUISHERS SHALL BE INSTALLED IN - GROUP M SECTION 906.3 CLASS A FIRE HAZARDS: 75' MAXIMUM TRAVEL DISTANCE FOR TYPE 2-A EXTINGUISHER TABLE 906.3(1) LIGHT (LOW) HAZARD OCCUPANCY MIN. RATED SINGLE EXTINGUISHER: 2-A MAX. FLOOR AREA PER UNIT: 3,000 SF MAX. TRAVEL DISTANCE TO EXTINGUISHER: 75 FEET	NFPA 1 TABLE 13.6.2 MERCANTILE = PORTABLE FIRE EXTINGUISHERS REQUIRED NFPA 1 TABLE 13.6.8.2.1.1 CLASS A HAZARDS: MIN. RATED SINGLE EXTINGUISHER: 2-A MIN. FLOOR AREA PER UNIT: 3,000 SF MAX. FLOOR AREA PER UNIT: 11,250 SF MAX. TRAVEL DISTANCE TO EXTINGUISHER: 75 FEET	PROVIDED FOR EACH TENANT SPACE. SEE LIFE SAFETY PLAN FOR LOCATIONS

	FLORIDA BUILDING CODE	FIRE CODE NFPA 1 / NFPA 101	DESIGNED
FIRE ALARM DETECTION SYSTEM	SECTION 907.2.7.1 GROUP M EXCEPTION 2: MANUAL FIRE ALARM BOXES ARE NOT REQUIRED WHERE THE BUILDING IS EQUIPPED WITH AN AUTOMATIC SPRINKLER SYSTEM. OCCUPANT NOTIFICATION APPLIANCE WILL AUTOMATICALLY ACTIVE THROUGHOUT THE NOTIFICATION ZONES UPON SPRINKLER WATERFLOW	NFPA 1 CHAPTER 13.7.1.2 NFPA 101 CHAPTER 9.6.1.3 A FIRE ALARM SYSTEM REQUIRED FOR LIFE SAFETY SHALL BE INSTALLED, TESTED, AND MAINTAINED.	NEW CONSTRUCTION IS EQUIPPED WITH FIRE ALARM AND DETECTION SYSTEMS

EXITING REQUIREMENTS - MEANS OF EGRESS

	FLORIDA BUILDING CODE	NFPA 101 - LIFE SAFETY CODE	DESIGNED
MINIMUM NUMBER OF EXITS	SECTION 1015.1, TABLE 1015.1 2 (TWO) EXITS FROM ANY SPACE THAT EXCEEDS OCC. LOAD 49 FOR GROUP M MERCANTILE: 50 OCCUPANTS PER TENANT SPACE CHAPTER 36.2.4 NOT LESS THAN TWO SEPARATE EXITS SHALL BE PROVIDED ON EVERY STORY.	CHAPTER 7.4.1.1 THE NUMBER OF EGRESS FROM ANY STORY SHALL BE NOT LESS THAN TWO (2) EXITS.	2 EXITS PER TENANT SPACE SEE LIFE SAFETY PLANS

	FLORIDA BUILDING CODE	NFPA 101 - LIFE SAFETY CODE	DESIGNED
COMMON PATH OF EGRESS TRAVEL TO AN EXIT	CHAPTER 10 TABLE 1014.3 (ALL OTHERS): 75 FEET WITH SPRINKLER SYSTEM	CHAPTER 36.5.3 SHALL NOT EXCEED 100 FT, IN MERCANTILE OCCUPANCIES CLASSIFIED AS LOW OR ORDINARY HAZARD WHERE THE BUILDING IS EQUIPPED WITH AUTOMATIC SPRINKLER SYSTEM	SEE LIFE-SAFETY PLANS

	FLORIDA BUILDING CODE	NFPA 101 - LIFE SAFETY CODE	DESIGNED
EXIT ACCESS TRAVEL DISTANCE	SECTION 1016, TABLE 1016.2 GROUP M: 250 FEET WITH SPRINKLER SYSTEM SHALL BE MEASURED FROM THE MOST REMOTE POINT WITHIN A STORY ALONG THE NATURAL AND UNOBSTRUCTED PATH OF HORIZONTAL AND VERTICAL EGRESS TRAVEL TO AN ENTRANCE TO AN EXIT	CHAPTER 36.2.6.2 GROUP M: CLASSIFIED AS HAZARD PROTECTED THROUGHOUT BY SUPERVISED AUTOMATIC SPRINKLER SYSTEM, TRAVEL DISTANCE SHALL NOT EXCEED 250 FEET.	SEE LIFE-SAFETY PLANS

	FLORIDA BUILDING CODE	NFPA 101 - LIFE SAFETY CODE	DESIGNED
DEAD-END CORRIDOR	SECTION 1018.4 GROUP M: WITH AUTOMATIC SPRINKLER SYSTEM. THE LENGTH OF DEAD-END CORRIDORS SHALL NOT EXCEED 50 FEET	CHAPTER 36.2.5.2 DEAD END CORRIDORS SHALL NOT EXCEED 20 FEET	NO DEAD-END CORRIDOR

	FLORIDA BUILDING CODE	NFPA 101 - LIFE SAFETY CODE	DESIGNED
MINIMUM CLEAR OPENING OF EXIT DOORS	SECTION 1008.1.1 CLEAR WIDTH OF EXIT DOOR: 32-INCHES	CHAPTER 7.2.1.2.3.2 NOT LESS THAN 32-INCHES OF CLEAR WIDTH	MINIMUM CLEAR WIDTH OF 32-INCHES SEE LIFESAFETY PLAN
EXIT SIGNS	SECTION 1011 APPROVED EXIT SIGNS READILY AVAILABLE FROM DIRECTION OF EGRESS TRAVEL. INTERVENING MEANS OF EGRESS DOORS WITHIN THE EXITS SHALL BE MARKED BY EXIT SIGNS. PLACEMENT SHALL BE NO MORE THAN 100 FEET VIEWING DISTANCE FOR THE SIGN, WHICHEVER IS LESS, FROM THE NEAREST VISIBLE EXIT SIGN.	CHAPTER 7.10.2.1 EXITS, SHALL BE MARKED BY AN APPROVED SIGN THAT IS READILY VISIBLE FROM ANY DIRECTION OF EXIT ACCESS. CHAPTER 7.10.5.2 EVERY SIGN IS REQUIRED TO BE ILLUMINATED	EXIT SIGNS PROVIDED, SEE LIFE SAFETY PLANS

LIFE SAFETY SUMMARY

BUILDING INFORMATION

BUILDING NAME:	WELLINGTON GREEN PARCEL 'F' PHASE II - RETAIL H MODIFICATION
BUILDING NUMBER:	RETAIL 'H'
TYPE OF WORK:	NEW CONSTRUCTION
AREA OF WORK:	9,000 NET SQ. FT. - 1ST FLOOR
TOTAL BUILDING (GSF):	9,245 GROSS SQ. FT.
EGRESS DOORS:	DESIGNED FOR IMPACT ASSEMBLY (BASIC WIND SPEED 160 MPH), WIND ZONE 3
EXTERIOR GLAZING:	DESIGNED FOR IMPACT RESISTANT AND BLAST MITIGATION, CLIMATE ZONE 1A (PALM BEACH COUNTY)

BUILDING CATEGORIZATION AND PHYSICAL PROPERTIES - CHAPTERS 3, 6, 136

	FLORIDA BUILDING CODE CHAPTER 3, SECTION 309	FIRE CODE NFPA 1 / NFPA 101
OCCUPANCY CLASSIFICATION	GROUP M - MERCANTILE RETAIL	FIRE CODE CHAP 6.1.1.0 MERCANTILE - AN OCCUPANCY USED FOR USED FOR THE DISPLAY AND SALE OR MERCHANDISE NFPA 101 CHAP 36.1.4.2.1 (3) MERCANTILE - CLASS C ALL MERCANTILE OCCUPANCIES OF NOT MORE THAN 3000 SQFT GROSS AREA AND USED FOR SALES PURPOSES OCCUPYING ONE STORY ONLY.

	FLORIDA BUILDING CODE CHAPTER 6 TABLE 601	FIRE CODE NFPA 1 / NFPA 101
CONSTRUCTION TYPE	TYPE IIB (NON-COMBUSTIBLE MATERIALS, ONE-STORIES)	NOT APPLICABLE

	FLORIDA BUILDING CODE CHAPTER 6 TABLE 601		FIRE CODE NFPA 1 / NFPA 101
FIRE RESISTANCE RATING REQUIREMENTS (HOUR) TYPE IIB NON-COMBUSTIBLE	BEARING WALLS EXTERIOR INTERIOR	0 (ZERO)	NFPA 1 SECTION 6.1.14.1.2 0 (ZERO) SEPARATION (NO SEPARATION REQUIRED, BUILDING IS NOT A MIXED OCCUPANCY, CLASSIFIED AS MERCANTILE OCCUPANCY)
	NON-BEARING WALLS EXTERIOR	0 (ZERO)	
	NON-BEARING WALLS INTERIOR	0 (ZERO)	
	FLOOR CONSTRUCTION & ASSOCIATED MEMBERS	0 (ZERO)	
	ROOF CONSTRUCTION & ASSOCIATED MEMBERS	0 (ZERO)	

	FLORIDA BUILDING CODE CHAPTER 16 TABLE 1604.5	FIRE CODE NFPA 1 / NFPA 101
RISK CATEGORY	CATEGORY II - BUILDING AND OTHER STRUCTURES EXCEPT THOSE LISTED IN RISK CATEGORIES I, III AND IV	NOT AVAILABLE

	FLORIDA BUILDING CODE CHAPTER 16 SECTION 1609.3	FIRE CODE NFPA 1 / NFPA 101
BASIC WIND SPEED	FIGURE 1609A CATEGORY II ULTIMATE DESIGN 3-SECOND GUST WIND SPEED OF 160 MPH. WIND SPEED CORRESPOND TO APPROXIMATELY A 7% PROBABILITY OF EXCEEDANCE IN 50 YEARS.	NOT AVAILABLE

BUILDING PHYSICAL PROPERTIES - CHAPTER 5

	FLORIDA BUILDING CODE CHAPTER 5 TABLE 503	FIRE CODE NFPA 1 / NFPA 101 NFPA 101	DESIGNED
PROPERTIES	GROUP M TYPE IIB 2-STORY MAXIMUM 12,500 SQFT MAX. AREA 55'-0" MAX. HEIGHT	CHAPTER 4.6.3 STORIES IN HEIGHT SHALL BE COUNTED STARTING WITH THE LEVEL OF EXIT DISCHARGE AND ENDING WITH THE HIGHEST OCCUPIABLE STORY CONTAINING THE OCCUPANCY	STORY: 1-STORY AREA: 9,000 SQFT HEIGHT: 24'-0"

MEANS OF EGRESS - OCCUPANT LOAD GROUP M MERCANTILE

	FLBC, CHAPTER 10 TABLE 1004.1.2	NFPA 101, CHAPTER 7 TABLE 7.3.1.2
	OCCUPANT LOAD FACTORS (SQFT PER PERSON)	
SALES AREA ON STREET FLOOR:	30	30
FLOORS OR PORTIONS OF FLOORS USED FOR STORAGE, RECEIVING, AND SHIPPING, AND NOT OPEN TO GENERAL PUBLIC	300	300

OCCUPANT LOAD CALCULATIONS

SPACE	AREA	SQFT PER OCC.	OCCUPANCY LOAD
TENANT 1	1500	30	50
TENANT 2	1500	30	50
TENANT 3	1500	30	50
TENANT 4	1500	30	50
TENANT 5	1500	30	50
TENANT 6	1500	30	50
		TOTAL	300

FIRE AND SMOKE PROTECTION FEATURES - CHAPTER 7

PROPERTIES	FLORIDA BUILDING CODE CHAPTER 7 SECTION 705	FIRE CODE NFPA 1 / NFPA 101	DESIGNED
PROJECTIONS: CORNICES, EAVE OVERHANGS, EXTERIOR BALCONIES AND SIMILAR PROJECTIONS	TABLE 705.2 - FIRE SEPARATION DISTANCE: 5 FEET OR GREATER = 40 INCHES MINIMUM DISTANCE FROM LINE USED TO DETERMINE FSD (FIRE SEPARATION DISTANCE)	NOT AVAILABLE	NEW EXTERIOR WALL SEPARATION TO EXISTING BUILDING: 75' -0" NEW EXTERIOR WALL CANOPY PROJECTION TO EXISTING BUILDING: 20' -0"
UNPROTECTED OPENING ON EXTERIOR WALLS	SECTION 705.8.1 - TABLE 705.8 - FIRE SEPARATION DISTANCE: 75' TO LESS THAN 30' DEGREE OF OPENING PROTECTION: UNPROTECTED, SPRINKLERED ALLOWABLE AREA: NO LIMIT SECTION 705.8.3 - WHERE UNPROTECTED OPENINGS ARE PERMITTED, WINDOWS AND DOORS SHALL BE CONSTRUCTED OF ANY APPROVED MATERIALS.	NOT AVAILABLE	UNPROTECTED WINDOW OPENING ON EAST EXTERIOR WALL AREA OPPOSITE EXISTING BUILDING: 200 SFQT

LIFE SAFETY INFORMATION

BUILDING CODES

- FLORIDA BUILDING CODE, BUILDING FIFTH EDITION (2014).
- FLORIDA BUILDING CODE, ACCESSIBILITY FIFTH EDITION (2014).
- FLORIDA BUILDING CODE, MECHANICAL, FIFTH EDITION (2014).
- FLORIDA BUILDING CODE, PLUMBING, FIFTH EDITION (2014).
- FLORIDA BUILDING CODE FUEL GAS, FIFTH EDITION(2014).
- FLORIDA BUILDING CODE ENERGY CODE, FIFTH EDITION (2014).
  - INTERNATIONAL ENERGY CONSERVATION CODE, 2012.

LIFE SAFETY / FIRE CODES

- THE FLORIDA FIRE PREVENTION CODE (FIFTH EDITION)
  - NFPA 1, FLORIDA EDITION, 2012 EDITION
  - NFPA 101, FLORIDA EDITION, 2012 EDITION
- NFPA-70 2014 NATIONAL ELECTRICAL CODE
- ADOPTED NFPA STANDARDS

STATE REQUIREMENTS FOR EDUCATIONAL FACILITIES

- STATE REQUIREMENTS FOR EDUCATIONAL FACILITIES - SREF, 2012, EFFECTIVE NOV. 19, 2012

NOTE:
ALL CODES SHALL COMPLY WITH THE FLORIDA STATUTES 633A-3.0.12 AND THE STATE FIRE MARSHALL'S RULE. THIS IS NOT INCLUSIVE OF ALL CODES AND STANDARDS THAT MAY OR MAY NOT APPLY TO THIS PROJECT.

LIFE SAFETY LEGEND

SYMBOL	DESCRIPTION
P ▪▪▪▶	PRIMARY MEANS OF EGRESS
●▪▪▪▪▪▶	TRAVEL DISTANCE
⊗	NEW CEILING MOUNTED EXIT LIGHT FIXTURE.
F◀	FIRE ALARM TO MAINTAIN OPERATION.
F	MANUAL ALARM BOX (PULL STATION & PULL BOX) TO MAINTAIN OPERATION.
F	MANUAL ALARM BOX (PULL STATION & PULL BOX) TO MAINTAIN OPERATION.
S	FIRE ALARM SMOKE DETECTOR.
H	FIRE ALARM HEAT DETECTOR
FE	FIRE EXTINGUISHER W/ WALL BRACKET
F S	FIRE ALARM SMOKE DETECTOR TO MAINTAIN OPERATION.
F H	FIRE ALARM / HORN STROBE TO MAINTAIN OPERATION.
F H	FIRE ALARM / HORN STROBE TO MAINTAIN OPERATION.
F FACP	FIRE ALARM CONTROL PANEL TO BE RELOCATED AND MAINTAIN OPERATION.
F D	FIRE ALARM SYSTEM MAGNETIC DOOR HOLDER TO MAINTAIN OPERATION.
EM EM	NEW EMERGENCY LIGHTING
EM	EXISTING EMERGENCY LIGHTING TO MAINTAIN OPERATION.
FEC	SEMI RECESSED FIRE EXTINGUISHER CABINET AND 2A EXTINGUISHER. CABINET SHALL BE FIRE RATED WHEN IN FIRE RATED PARTITION.
S	FIRE ALARM SPEAKER / STROBE DEVICE
	FIRE ALARM HORN DEVICE
OS	OCCUPANCY SENSOR
PH	PANIC HARDWARE
OS	OCCUPANCY SIGN

USE OF EXISTING BUILDING DURING CONSTRUCTION.

- CONSTRUCTION MANAGER TO PROVIDE SAFE MEANS OF EGRESS FOR THE ADJACENT EXISTING BUILDING THROUGHOUT CONSTRUCTION. AT LIMITED TIMES WHEN EGRESS IS NOT AVAILABLE THE EXISTING BUILDING SHALL NOT BE OCCUPIED. CM TO COORDINATE ALL UNOCCUPIED TIMES WITH THE USERS.

LIFE SAFETY PLAN GENERAL NOTES

1. ALL FIRE ALARM SYSTEMS SHOWN ARE FOR REFERENCE ONLY. REFER TO FA AND SYS DRAWINGS FOR COMPLETE DESIGN INTENT AND DEVICE LOCATIONS.
2. FIRE WALLS / SMOKE WALLS - RED OR YELLOW CAULK SHALL BE USED. (WHITE IS NOT ALLOWED) .
3. WHEN APPLICABLE: EACH NEW FIRE WALL, SMOKE PARTITION REQUIRED TO HAVE PROTECTED OPENINGS SHALL BE PERMANENTLY IDENTIFIED WITH SIGNS OR STENCILING ABOVE ANY DECORATIVE CEILING AND IN CONCEALED SPACES WITH THE WORDING: "FIRE AND SMOKE BARRIER - PROTECT ALL OPENINGS", OR SIMILAR LANGUAGE. SUCH SIGNS OR STENCILING SHALL BE IN 4 INCH HIGH LETTERS, ½ INCH STROKE, AND NOT MORE THAN 15 FEET ON CENTER.
4. WHEN APPLICABLE: ALL PENETRATIONS THROUGH A FIRE OR SMOKE WALL / PARTITION SHALL BE PROPERLY SEALED AND SUBJECT TO INSPECTION.
5. WHEN APPLICABLE: CONTRACTOR TO PROVIDE MONOKOTE MK 100HB SPRAY APPLIED FIRE PROOFING TO ALL NEW & EXISTING PRIMARY STRUCTURAL FRAME & COLUMNS, EXISTING EXTERIOR & INTERIOR BEARING WALLS, AND EXISTING & NEW ROOF CONSTRUCTION TO HAVE A FIRE RESISTANT RATING OF 1 HOUR.

WILLIAMSON DACAR ASSOCIATES
ARCHITECTURE / ENGINEERING / PLANNING
1550 CLEARWATER DRIVE, SUITE 106
WEST PALM BEACH, FL 33401
PH (772) 725-0951 www.williamsondacar.com

Architect: AA 0002541
Engineering: EB 0006884

WELLINGTON GREEN PARCEL "F"
PHASE II RETAIL "H" MODIFICATION
PETITION NO. 16-18 (2016-08 ASA 53)
2545 SOUTH STATE ROAD 7
WELLINGTON, FLORIDA 33414

Revisions of Drawings

No.	Date	Revisions

Issues of Drawings

No.	Date	Issues
1	06.15.16	100%CD - PERMIT SET

Phase:
Checked:
Drawn: JA

Drawing Title:
LIFE SAFETY SCHEDULE

WDA Proj. No.: 1526-01
Owner Proj. No.:
Scale: AS NOTED

Sheet No.
LS0.1
No. of Sheets.:

THIS DOCUMENT CONTAINS COPYRIGHTED MATERIAL AND TRADE SECRET INFORMATION BELONGING EXCLUSIVELY TO WILLIAMSON DACAR ASSOCIATES, INC. ANY UNAUTHORIZED USE, DISCLOSURE, DISSEMINATION, OR APPLICATION OF ANY OF THE INFORMATION CONTAINED HEREIN MAY RESULT IN LIABILITY UNDER APPLICABLE LAWS

COMMERCIAL ENERGY EFFICIENCY - ENERGY CONSERVATION CODE 2014
TOTAL BUILDING PERFORMANCE

C407.3

COMPLIANCE BASED ON THE TOTAL BUILDING PERFORMANCE REQUIRES THAT A PROPOSED BUILDING (PROPOSED DESIGN) BE SHOWN TO HAVE AN ANNUAL ENERGY COST THAT IS LESS THAN OR EQUAL TO THE ANNUAL ENERGY COST OF THE STANDARD REFERENCE DESIGN. ENERGY PRICES USED IN THE TOTAL BUILDING PERFORMANCE COMPLIANCE CALCULATION SHALL BE THOSE CONTAINED IN THE SOFTWARE APPROVED BY THE FLORIDA BUILDING COMMISSION.

DOCUMENTATION, CALCULATIONS AND COMPLIANCE REPORT SHALL BE PROVIDED FOR CODE OFFICIAL REVIEW.

COMMERCIAL ENERGY EFFICIENCY - ENERGY CONSERVATION CODE 2014
BUILDING ENVELOPE REQUIREMENTS

BUILDING COMPONENT	FLORIDA BUILDING CODE - ENERGY CONSERVATION CHAPTER 4 COMMERCIAL ENERGY EFFICIENCY		
CLIMATE ZONE	TABLE C301.1 CLIMATE ZONE 1A MOIST- WARM HUMID LOCATION (IEC 2012 C301.1)		
WALLS, ABOVE GRADE	TABLE C402.2 OPAQUE THERMAL ENVELOPE REQUIREMENTS: MASS - R-5.7ci (CONTINUOUS INSULATION) * * x IS ALLOWED TO BE SUBSTITUTED WITH CONCRETE BLOCK WALLS (ASTM C90) UNGROUTED OR PARTIALLY GROUTED AT 32 INCHES OR LESS ON CENTER VERTICALLY AND 48 INCHES OR LESS ON CENTER HORIZONTALLY WITH UNGROUTED CORES FILLED WITH MATERIALS WITH THERMAL CONDUCTIVITY OF 0.44 BTU-IN		
ROOF	TABLE C402.2 OPAQUE THERMAL ENVELOPE REQUIREMENTS: INSULATION ENTIRELY ABOVE DECK - R-20ci (CONTINUOUS INSULATION)		
FLOORS	TABLE C402.2 OPAQUE THERMAL ENVELOPE REQUIREMENTS: MASS - NR (NO REQUIREMENT)		
DOORS	TABLE C402.2 OPAQUE THERMAL ENVELOPE REQUIREMENTS: SWINGING - U-0.61		
FENESTRATION	C402.3.1 MAXIMUM AREA SHALL NOT EXCEED 30 PERCENT OF THE GROSS ABOVE-GRADE WALL AREA.		
	C402.3.1.1 INCREASED VERTICAL FENESTRATION AREA WITH DAYLIGHTING CONTROLS CLIMATE ZONE 1A MAXIMUM OF 40% OF THE GROSS ABOVE-GRADE WALLS SHALL BE PERMITTED, PROVIDED WITH: - NO LESS THAN 90% OF THE CONDITIONED FLOOR AREA IS WITHIN A DAYLIGHT ZONE - AUTOMATIC DAYLIGHTING CONTROLS ARE INSTALLED IN DAYLIGHT ZONES, AND - VISIBLE TRANSMITTANCE (VT) IS GREATER THAN OR EQUAL TO 1.1 X SOLAR HEAT GAIN COEFFICIENT (SHGC).		
	C402.3.3 MAXIMUM U-FACTOR AND SOLAR HEAT GAIN COEFFICIENT (SHGC) TABLE C402.3 VERTICAL FENESTRATION:		
	CLIMATE ZONE 1A	MAXIMUM REQ'D	DESIGNED (SYSTEM PERFORMANCE)
	U-FACTOR FIXED FENESTRATION	0.50	0.50
	SHGC (SOLAR HEAT GAIN COEF)	0.25	0.25
	VT (VISUAL TRANSMISSION)	(0.25 x 1.1) VT > 0.275	0.29

COMMERCIAL ENERGY EFFICIENCY - ENERGY CONSERVATION CODE 2014
ELECTRICAL POWER AND LIGHTING SYSTEMS (MANDATORY)

COMPONENT	FLORIDA BUILDING CODE - ENERGY CONSERVATION CHAPTER 4	DESIGNED
INTERIOR LIGHTING CONTROLS	C405.2 EACH AREA ENCLOSED BY WALLS OR FLOOR-TO-CEILING PARTITIONS SHALL HAVE AT LEAST ONE MANUAL CONTROL FOR THE LIGHTING SERVING THAT AREA. EXCEPTIONS: 1. EMERGENCY AREAS 2. STAIRWAYS OR CORRIDORS AS MEANS OF EGRESS	(FUTURE TENANT SPACE)
LIGHT REDUCTION CONTROLS	C405.2.1.2 .ALLOW THE OCCUPANT TO REDUCE THE CONNECTED LIGHTING LOAD IN A UNIFORM PATTERN BY AT LEAST 50 PERCENT.	(FUTURE TENANT SPACE)
OCCUPANCY SENSORS	C405.2.2.2 SHALL BE INSTALLED IN ALL SPACES 300 SQFT. OR LESS ENCLOSED BY FLOOR-TO-CEILING. DEVICES SHALL BE INSTALLED TO AUTOMATICALLY CONTROL DEVICES TO TURN OFF LIGHTS WITHIN 30 MINUTES OF ALL OCCUPANTS LEAVING THE SPACE. SPACES: CLASSROOMS CONFERENCE/MEETING BREAK ROOMS PRIVATE OFFICES RESTROOMS STORAGE & JANITORIAL	(FUTURE TENANT SPACE)
DAYLIGHT ZONE CONTROL	C405.2.2.3 LIGHTS IN THE DAYLIGHT ZONE ARE CONTROLLED INDEPENDENTLY OF GENERAL AREA LIGHTING AND ARE CONTROLLED. EACH DAYLIGHT ZONE SHALL NOT EXCEED 2500 SQFT.	(FUTURE TENANT SPACE)
EXTERIOR LIGHTING CONTROL	C405.2.4 LIGHTING DESIGNATED FOR DUSK-TO-DAWN OPERATION SHALL BE CONTROLLED BY: AN ASTRONOMICAL TIME SWITCH -OR- PHOTOSENSOR.	PROVIDED METHOD: PHOTOSENSOR
TANDEM WIRING	C405.3 LUMINARIES LOCATED WITHIN THE SAME AREA SHALL BE TANDEM WIRED: - FLUORESCENT LUMINAIRES EQUIPPED WITH ONE, THREE OR ODD NUMBERED LAMP CONFIGURATIONS, THAT ARE RECESSED MOUNTED WITHIN 10-FEET CENTER-TO-CENTER OF EACH OTHER. - FLUORESCENT LUMINAIRES WITH ONE, THREE OR ANY ODD-NUMBERED LAMP CONFIGURATIONS, THAT ARE PENDANT OR SURFACE-MOUNTED WITHIN 1-FOOT EDGE TO EDGE OF EACH OTHER.	(FUTURE TENANT SPACE)
EXIT SIGNS	C405.4 INTERNALLY ILLUMINATED EXIT SIGNS SHALL NOT EXCEED 5 WATTS PER SIDE.	PROVIDED
INTERIOR LIGHTING POWER REQUIREMENTS	TABLE C405.5.2(1) BUILDING AREA METHOD RETAIL 1.4 LPD (w/ft2)	(FUTURE TENANT SPACE)
EXTERIOR BUILDING GROUNDS LIGHTING	C405.6.1 ALL EXTERIOR BUILDING GROUNDS LUMINAIRES THAT OPERATE AT GREATER THAN 100 WATTS SHALL CONTAIN LAMPS HAVING A MINIMUM EFFICACY OF 60 LUMENS PER WALL UNLESS THE LUMIAIRE IS CONTROLLED BY A MOTION SENSOR.	PROVIDED

COMMERCIAL ENERGY EFFICIENCY - ENERGY CONSERVATION CODE 2014
ADDITIONAL EFFICIENCY PACKAGE OPTIONS

	FLORIDA BUILDING CODE - ENERGY CONSERVATION CHAPTER 6	DESIGNED
EFFICIENCY PACKAGE	C406.1 BUILDINGS SHALL COMPLY WITH AT LEAST ONE OF THE FOLLOWING: 1.) EFFICIENT HVAC PERFORMANCE 2.) EFFICIENT LIGHTING SYSTEM 3.) ON-SITE SUPPLY OF RENEWABLE ENERGY	- EFFICIENT HVAC PERFORMANCE - EFFICIENT LIGHTING SYSTEM

THIS DOCUMENT CONTAINS COPYRIGHTED MATERIAL AND TRADE SECRET INFORMATION BELONGING EXCLUSIVELY TO WILLIAMSON DACAR ASSOCIATES, INC. ANY UNAUTHORIZED USE, DISCLOSURE, DISSEMINATION, OR DUPLICATION OF ANY OF THE INFORMATION CONTAINED HEREIN MAY RESULT IN LIABILITY UNDER APPLICABLE LAWS.

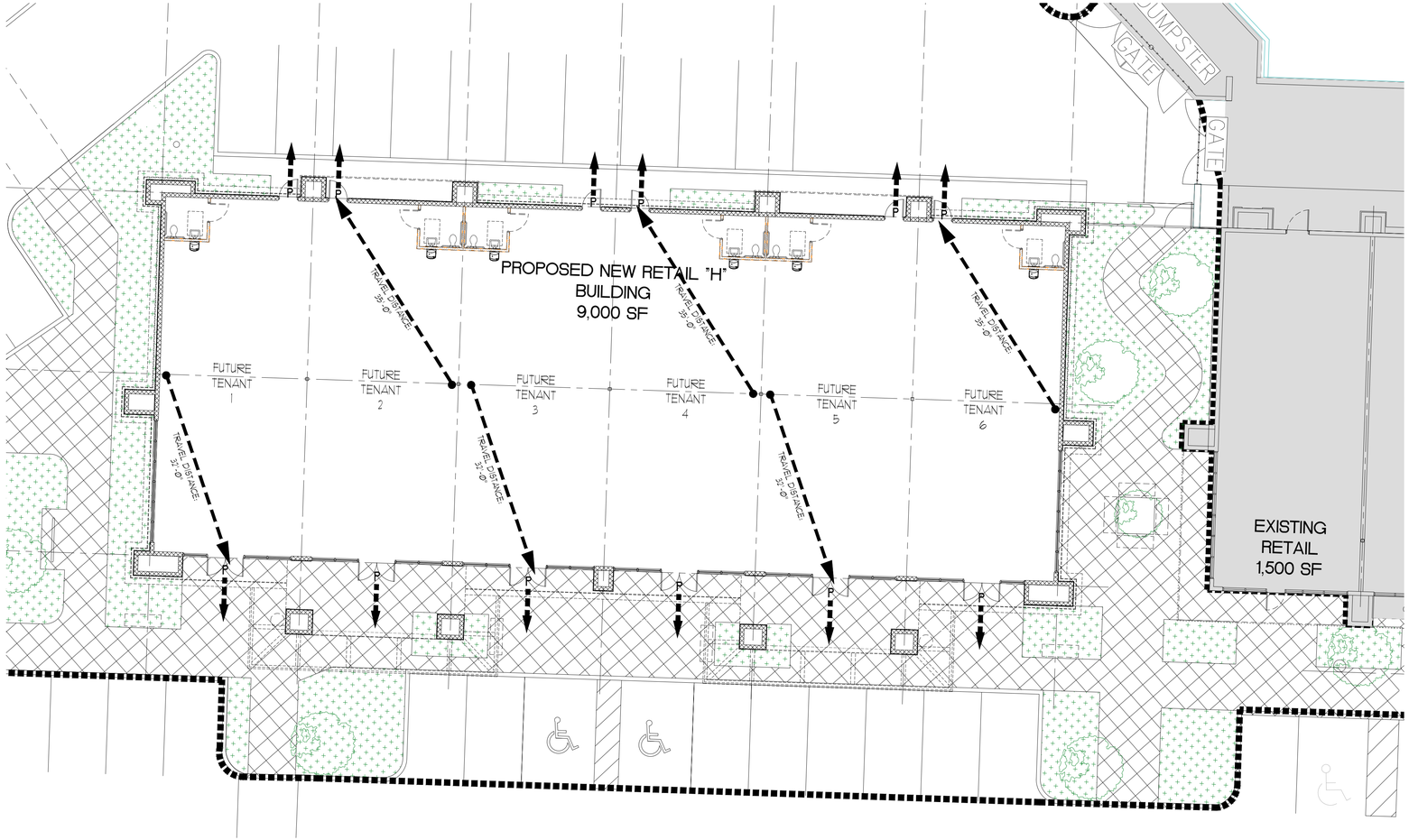

1 / LS02 LIFE SAFETY PLAN
SCALE: 3/32" = 1'-0"

WILLIAMSON DACAR ASSOCIATES
architecture / planning / engineering
ARCHITECTURE / ENGINEERING / PLANNING
1500 GULF BLVD, SUITE 108
CLEARWATER, FL 33767
PH (727) 725-0951 www.williamsondacar.com

Architect: AA 0002541
Engineering: EB 0006884

WELLINGTON GREEN PARCEL "F"
PHASE II RETAIL "H" MODIFICATION
PETITION NO. 16-18 (2016-08 ASA 53)
2545 SOUTH STATE ROAD 7
WELLINGTON, FLORIDA 33414

Revisions of Drawings

No.	Date	Revisions

Issues of Drawings

No.	Date	Issues

Phase:
Checked:
Drawn: JA

Drawing Title:
LIFE SAFETY PLAN

WDA Proj. No.: 1526-01
Owner Proj. No.:
Scale: AS NOTED

Sheet No.
LS0.2
No. of Sheets.:

ABBREVIATIONS

&	AND	H.C.	HANDICAPPED ACCESSIBLE
∠	ANGLE	HM.	HOLLOW METAL
@	AT	HORZ.	HORIZONTAL (LY)
℄	CENTERLINE	HB.	HOSE BIB
[	CHANNEL	HR.	HOUR
∅	DIAMETER OR ROUND	INCL.	INCLUDING
⊥	PERPENDICULAR OR STRUCTURAL TEE	INFOR.	INFORMATION
#	NUMBER OR POUND	ID.	INSIDE DIAMETER
ABV.	ABOVE	INSUL.	INSULATE (D) (ING) (TION)
ACOUS.	ACOUSTICAL	INT.	INTERIOR
ADJ.	ADJUSTABLE	JB	JUNCTION BOX (ES)
A/C	AIR CONDITIONING	JC	JANITORS CLOSET
AFF.	ABOVE FINISHED FLOOR	JCT.	JUNCTION
ALT.	ALTERNATE	JT.	JOINT
AL.	ALUMINUM	L.	LENGTH
ALUM.	ALUMINUM	LAM.	LAMINATE (D)
A.S.T.M.	AMERICAN SOCIETY TESTING MATERIALS	LAV.	LAVATORY
A.I.S.C.	AMERICAN INSTITUTE OF STEEL CONSTRUCTION	LG.	LAMINATED GLASS
A.I.A.	AMERICAN INSTITUTE OF ARCHITECTS	LDG.	LEADED GLASS
AB.	ANCHOR BOLT	LL.	LIVE LOAD
ANOD.	ANODIZED	LT.WT.	LIGHT WEIGHT
ARCH.	ARCHITECT(URAL)	MANUF.	MANUFACTURE (ER)
AR.	AS REQUIRED	MARB.	MARBLE
AUTO.	AUTOMATIC	MAS.	MASONRY
A.N.S.I.	AMERICAN NATIONAL STANDARDS INSTITUTE	MCJ	MASONRY CONTROL JOINT
AWM.	ALIGN WITH WINDOW MULLION	M.O.	MASONRY OPENING
BKSPL.	BACK SPLASH	MAX.	MAXIMUM
BSMT.	BASEMENT	MG.	MIRROR GLASS
BRG.	BEARING	MIN.	MINIMUM
BM.	BEAM	M/R	MOISTURE RESISTANT
BTWN.	BETWEEN	MTD.	MOUNTED
BIT.	BITUMINOUS	MTL.	METAL
BLK.	BLOCK	MECH.	MECHANIC (AL)
BLKG.	BLOCKING	MAT.	MATERIAL
BD.	BOARD	MISC.	MISCELLANEOUS
BOT.	BOTTOM	NFPA.	NATIONAL FIRE PROTECTION AGENCY
B.O.	BOTTOM OF	N.	NORTH
BRK.	BRICK	NTS	NOT TO SCALE
BLDG.	BUILDING	NEC.	NATL. ELECTRIC CODE
BU.	BUILT-UP	NSF	NATL. SANITATION FOUND.
CO.	CLEAN OUT	OSHA	OCCUPATIONAL SAFETY AND HEALTH ADMINISTRATION
CPT.	CARPET (ED)	OC.	ON CENTER (S)
C.B.	CATCH BASIN	OPG.	OPENING
CTR.	CENTER	OA.	OVER ALL
CLG.	CEILING	OD.	OUTSIDE DIAMETER
C.F.C.I.	FURNISHED INSTALLED	OF.O.I.	OWNER FURNISHED OWNER INSTALLED, (N.I.C.)
CEM.	CEMENT	OF.C.I.	OWNER FURNISHED CONTRACTOR INSTALLED
C.T.	CERAMIC TILE	O.H.	OPPOSITE HAND
CHAM.	CHAMFER	OWG.	ONE WAY GLASS
CHN LNK	CHAIN LINK	PNT	PAINT
C.I.	CAST IRON	PTD.	PAPER TOWEL DISPENSER
C.I.P.	CAST IN PLACE	PL	PROPERTY LINE
CIR.	CIRCLE	PLAM	PLASTIC LAMINATE
CIRCUM.	CIRCUMFERENCE	PLYWD	PLYWOOD
CLR	CLEARANCE	P/CF	POUNDS PER CUBIC FOOT
COL	COLUMN	P/LF	POUNDS PER LINEAL FOOT
CONC	CONCRETE	P/SF	POUNDS PER SQUARE FOOT
CMU	CONCRETE MASONRY UNIT	PSI	POUNDS PER SQUARE INCH
CONST.	CONSTRUCTION	PT.	POINT
CONTR.	CONTRACTOR	P.T.	PRESSURE TREATED
CONT.	CONTINUOUS OR CONTINUE	RAD.	RADIUS
CJ	CONTROL JOINT	REFL.	REFLECTED
CTPG	CLEAR TEMPERED PLATE GLASS	RE:	REFERENCE OR SEE
CTR	COUNTER	REF.	REFERENCE
CW	COLD WATER	REINF.	REINFORCING
DCD	CASE DRAIN	REQ'D.	REQUIRED
DEMO	DEMOLITION	RR.	RESTROOM
DF.	DRINKING WATER FOUNTAIN	REV.	REVISION (S) (REVISED)
DTL	DETAIL	RO	ROUGH OPENING
DIA	DIAMETER	R/W	RIGHT OF WAY
DIM	DIMENSION	SCH.	SCHEDULE
DS	DOUN SPOUT	SHT.	SHEET
DWG	DRAWING	SC	SOLID CORE
DL	DOUN LEADER	S.	SOUTH
DN	DOUN	SPEC.	SPECIFICATION (S)
EA.	EAST	S.S.	SAINLESS STEEL
E	EACH	S/S	SANITARY SEWER
EHD.	ELECTRIC HAND DRYER	SPG	SPANDRELITE PANEL GLASS
ELEC	ELECTRIC	STD	STANDARD
ELEV	ELEVATION	STL.	STEEL
EQ.	EQUAL	STOR	STORAGE
EW.	EACH WAY	STRUCT	STRUCTURAL
EWC.	ELECTRIC WATER COOLER	SUSP.	SUSPENDED
EWH.	ELECTRIC WATER HEATER	TEMP.	TEMPORARY
EXH.	EXHAUST	T & B	TOP AND BOTTOM
EJJT/ EJ.	EXPANSION JOINT	T.M.	TO MATCH
EXP.	EXPOSED	T.M.E.	TO MATCH EXISTING
EXIST./EXTG.	EXISTING	T.O.C.	TOP OF CONCRETE
EXT.	EXTERIOR	TOH.	TOTAL DYNAMIC HEAD
FA	FIRE ALARM	T.O.M.	TOP OF MASONRY
FBC	FLORIDA BUILDING CODE (S)	T.O.R.F.	TOP OF ROOF PERIMETER
FE.	FIRE EXTINGUISHER	T.O.R.D.	TOP OF ROOF DECK
F.CLG/ FIN. CEIL.	FINISH CEILING	T.O.W.	TOP OF WALL
F.F./ FIN. FL	FINISH FLOOR	TRANS.	TRANSITION
FIN.	FINISH (ED)	TTPG	TINTED TEMPERED PLATE GLASS
FLASH.	FLASHING	T. OF F.	TOP OF FOUNDATION
FL.	FLOOR	TEL.	TELEPHONE
FLR.	FLOOR (ING)	TV.	TELEVISION
FLUOR	FLUORESCENT	T & G.	TONGUE AND GROOVE
FOC.	FACE OF CONCRETE	TYP.	TYPICAL
FOF	FACE OF FINISH	U.N.O.	UNLESS NOTED OTHERWISE
FOFM	FACE OF FINISHED MASONRY	V.B.	VAPOR BARRIER
FOS.	FACE OF STUDS	VERT.	VERTICAL
F.O.SH.	FACE OF SHEATHING	VCT.	VINYL COMPOSITION TILE
F.O.S.M.	FACE OF STRUCTURAL MASONRY	VP	VENEER PLASTER
F.V.	FIELD VERIFY	VTR.	VENT THRU ROOF
FTG.	FOOTING	W/	WITH
FT.	FOOT	W.	WIDTH OR WEST
GALV.	GALVANIZED	WC.	WATER CLOSET
G.I.	GALVANIZED IRON	W. HTR.	WATER HEATER
GD.	GRADE (GRADING)	WNDW	WINDOW
GEN.	GENERAL	W/O	WITHOUT
GYP./GWB	GYPSUM WALL BOARD	WD	WOOD
H OR HT.	HEIGHT	WG	WIRE GLASS
HDW.	HARDWARE	WT.	WEIGHT
HDR.	HEADER	WP.	WATER PROOFING
HVAC.	HEATING/VENTILATING/ AIR CONDITIONING	WWF.	WELDED WIRE FABRIC
HGT.	HEIGHT		

THIS DOCUMENT CONTAINS COPYRIGHTED MATERIAL AND TRADE SECRET INFORMATION BELONGING EXCLUSIVELY TO WILLIAMSON DACAR ASSOCIATES, INC. AND UNAUTHORIZED USE, DISCLOSURE, DOWNLOADING, REPRODUCTION OF ANY OF THE INFORMATION CONTAINED HEREIN MAY RESULT IN LIABILITY UNDER APPLICABLE LAWS.

LEGEND OF SYMBOLS

SYMBOL	DESCRIPTION
ARCH. M.E.P.	NORTH ARROW SYMBOLS
NO. NO. NO. 60PT. @GA	ROOM NUMBER
	DOOR NUMBER
W	WINDOW NUMBER
P-1	PARTITION TYPE
EL. 30'-3" TOP OF BEAM	ELEVATION MARK
A 601 A	INTERIOR ELEVATION MARK
1	PLAN NOTE NUMBER
1	REVISION MARK
A 601	DETAIL MARK
	BATT INSULATION
	EXISTING C.M.U. WALL SEE PARTITION TYPE/ WALL TYPE
	NEW C.M.U. WALL SEE PARTITION TYPE/ WALL TYPE
	EXISTING METAL STUD WALLS SEE PARTITION TYPE/ WALL TYPE
	NEW METAL STUD WALLS SEE PARTITION TYPE/ WALL TYPE
	CONCRETE
	STUCCO, PLASTER OR G.W.B.
	GRADE / EARTH
XX XXX	BUILDING SECTION MARK
XX XXX	WALL SECTION MARK
XX XXX	DETAIL MARK
XX XXX	EXTERIOR ELEVATION MARK
S#	SIGNAGE NUBMER

* NOTE:
SPECIFIC DETAILS MAY CONTAIN SYMBOLS FOR MATERIALS THAT DIFFER FROM THESE GENERAL ITEMS NOTED.

PROJECT NOTES

1. The Specification, Ideas, Designs, and Arrangements represented herein are and shall remain the property of Architect and no part thereof shall be copied, disclosed to others or used in connection with any work or project other than the specified project for which they have been prepared and developed without written consent. Visual contact with these plans or specifications shall constitute conclusive evidence of acceptance of these restrictions.

2. Verify all conditions & dimensions & report any discrepancies to the Architect prior to beginning work. Verify & be responsible for all dimensions & conditions on the Job and this office must be notified of any variation from the dimensions & conditions shown by these drawings at the time of discovery.

3. The plans show the location of all fixtures & equipment & are intended to convey the general intent of the work in scope & layout. They are not intended to show in minute detail every & all accessories intended for the purpose of execution of the work, but is understood that such details are part of this work.

4. No work is to be installed prior to the submission and approval of appropriate and required shop drawings, samples, etc. as described in the contract documents.

5. Provide a complete & finished product. Any items not specified, or identified, but required to complete an assembly, system, etc. shall be considered part of this contract.

6. Coordinate and assure that all items of work will fit and function in accordance with the intent of these documents and that individual pieces of the same and different systems will properly function in conformance with the Contract Documents, the Manufacturer and Industry Standards.

7. Be responsible for all damage, inside or outside the limit of work due to operations. Restore all damaged areas or items to their original condition at no additional cost to the Owner. Provide all temporary protection as required to properly secure the site and the building from intruders, animals, and the elements.

8. Be responsible for any existing material or system integrated with scope of work for conformance with the contract documents and objectives of this project. All clearances and conflicts of any and all construction‡ Framing/ Mechanical/ Plumbing/ Electrical/ etc required shall be adjusted for proper fit, accessibility and function.

9. Be responsible for the coordination of all trades and work described in the drawings. Individual Contractors shall be responsible for the conformance of their design and execution to all applicable Local, State and Federal Building Codes and Ordinances, Zoning Bylaws and Governing Agencies as well as OSHA, NFPA and the Health Acts.

10. Pursue this work in a clean, organized, and professional manner and be responsible for maintaining the safety and security of the site during construction.

11. In the event of a conflict with items or systems specified or detailed in more than one location, provide the more expensive or higher quality item.

12. Supply all items identified to be provided in the specifications or the drawings independent of being indicated within the other.

13. Coordinate all dimensions or equipment & built in items with final placement locations as-built conditions.

14. In addition to the requirements of the specifications all material shall be installed in strict accordance with the manufacturers specifications and related trade practices or standards. The preparations and modifications of underlying conditions shall be complete and ready for the next trade or product. All work shall be in conformance with good trade practice and performed by skilled workers, trained in the installation of the product being installed. Work not conforming to these requirements shall be cause for rejection. Satisfactory remedies may involve complete removal and replacement of defective work or material at the contractors expense.

15. Be responsible for all required as built work drawings, calculations and diagrams for all systems as identified in the drawing specs at the time of installation. Coordination drawings are required per specifications to identify proper fit and functions as well as identify any possible conflicts prior to commencing with specific work.

16. Any Contractor, Subcontractor, Individual, Company, or their designees performing work or services for this project, be it for materials, labor or both shall be responsible for the detailed examination of existing conditions at the site, as indicated in drawings, or in other information available from a Public Agency or Utility Company. No consideration shall be given for claims made as a result of failure to understand, identify or establish existing conditions. Any damage to existing shall be the responsibility of the Contractor and repaired at his own expense.

17. Specifications & requirements indicated on the drawings are considered minimum acceptable criteria & may be superseded by more stringent criteria required as part of the documents. Notify the Architect for any possible conflicts or discrepancies prior to commencing the specific work.

18. All wood in contact with the concrete, masonry or as indicated or required shall be pressure preservative treated.

19. Coordinate & verify all exterior wall control & expansion joints prior to the commencement of specific work.

20. All conduit, piping & ductwork penetrating any rated assembly ceiling or walls shall have an approved fire rated assembly for the specific application, as shown herein and / or in the Specifications.

21. All finishes shall be protected where indicated as the final finish or finish to remain. Be responsible for all repairs to produce a uniform finish at final completion.

22. All roof penetrations and joints shall be properly flashed and caulked tight with specified sealant applicable to the conditions, and provide a weather tight assembly

CODE COMPLIANCE

BUILDING CODES

- FLORIDA BUILDING CODE 5TH EDITION (2014), BUILDING.
- FLORIDA BUILDING CODE 5TH EDITION (2014), EXISTING BUILDING.
- FLORIDA BUILDING CODE 5TH EDITION (2014), ACCESSIBILITY.
- FLORIDA BUILDING CODE 5TH EDITION (2014), MECHANICAL.
- FLORIDA BUILDING CODE 5TH EDITION (2014), PLUMBING.
- FLORIDA BUILDING CODE 5TH EDITION (2014), FUEL GAS.
- FLORIDA BUILDING CODE 5TH EDITION (2014), ENERGY CODE.

LIFE SAFETY / FIRE CODES

- THE FLORIDA FIRE PREVENTION CODE (5TH EDITION)

INDEX OF SHEETS

T-1	COVER SHEET
T-2	INDEX SHEET / GENERAL NOTES AND ABBREVIATION
T-3	SPECIFICATIONS
T-4	SPECIFICATIONS
T-5	SPECIFICATIONS
	CIVIL
C1.0	GRADING AND DRAINAGE PLAN
C2.0	WATER & SEWER PLAN
C3.0	PAVEMENT MARKING & SIGNAGE PLAN
C4.0	STORMWATER POLLUTION PREVENTION PLAN
C5.0	CIVIL DETAILS
C6.0	UTILITY DETAILS I
C6.1	UTILITY DETAILS II
	LANDSCAPE
L1.0	EXISTING VEGETATION INVENTORY
L2.0	PLANTING PLAN
L3.0	PLANTING DETAILS
L4.0	PLANTING SPECIFICATIONS
L5.0	IRRIGATION PLAN
L6.0	IRRIGATION DETAILS
	ARCHITECTURAL
LS0.1	LIFE SAFETY SCHEDULE
LS0.2	LIFE SAFETY PLAN
A1.1	OVERALL SITE PLAN
A2.1	ARCHITECTURAL SITE PLAN
A2.2	SITE DETAILS
A3.1	FLOOR PLAN
A3.2	REFLECTED CEILING PLAN
A3.3	ROOF PLAN
A4.1	BUILDING ELEVATIONS
A5.1	BUILDING SECTIONS
A5.2	TYPICAL WALL DETAILS
A5.3	WALL SECTIONS
A5.4	WALL SECTIONS
A5.5	WALL SECTIONS
A5.6	WALL SECTIONS
A5.7	WALL DETAILS
A5.8	WALL DETAILS
A5.9	TYPICAL DETAILS
A7.1	DOOR AND WINDOW SCHEDULES
	STRUCTURAL
S1.0	STRUCTURAL NOTE SHEET
S2.0	STRUCTURAL FOUNDATION PLAN
S2.1	STRUCTURAL ROOF FRAMING PLAN
S3.0	STRUCTURAL WALL SECTIONS
S3.1	STRUCTURAL WALL SECTIONS
S3.2	STRUCTURAL WALL SECTIONS
S3.3	STRUCTURAL WALL SECTIONS
S4.0	STRUCTURAL DETAILS
S4.1	STRUCTURAL DETAILS
S4.2	STRUCTURAL DETAILS
	ELECTRICAL
E0.0	ELECTRICAL LEGEND & GENERAL NOTES
E1.1	SITE PLAN - PHOTOMETRICS
E2.1	BUILDING PLAN - ELECTRICAL
E6.1	ELECTRICAL DETAILS
	FIRE PROTECTION
FP0.0	FIRE PROTECTION INDEX / NOTES
FP2.1	FIRE PROTECTION FLOOR PLAN
FP7.1	FIRE PROTECTION DETAILS
	PLUMBING
P0.0	INDEX/NOTES/SYMBOLS
P2.1	PLUMBING - FLOOR PLAN
P2.2	PLUMBING - ROOF PLAN
P6.1	PLUMBING ISOMETRIC
P6.2	PLUMBING ISOMETRIC
P7.1	PLUMBING DETAILS

LOCATION MAP

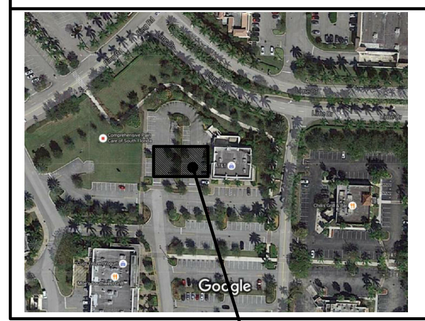

AREA OF WORK

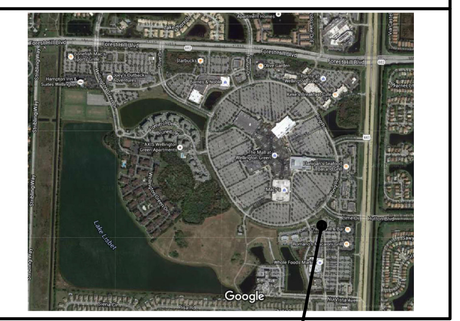

SITE LOCATION

WILLIAMSON DACAR ASSOCIATES©
Architecture / Engineering / Planning
Interiors
ARCHITECTURE / ENGINEERING / PLANNING
1550 MADRUGA AVENUE, SUITE 166
CLEARWATER, FL 33764
PH (727) 725-1951 www.williamsondacar.com

Architect: AA 0002541
Engineering: EB 0006884

WELLINGTON GREEN PARCEL "F"
PHASE II RETAIL "H" MODIFICATION
PETITION NO. 16-18 (2016-08 ASA 53)
2545 SOUTH STATE ROAD 7
WELLINGTON, FLORIDA 33414

Revisions of Drawings

No.	Date	Revisions

Issues of Drawings

No.	Date	Issues
1	6-15-16	100% CD - Permit Set

Phase:
Checked:
Drawn: JA

Drawing Tittle

INDEX SHEET/ GENERAL NOTES AND ABBREVIATION

WDA Proj. No.: 1526-01
Owner Proj. No.:
Scale: AS NOTED

Sheet No.

T-2

No. of Sheets.:

SPECIFICATIONS

01000 GENERAL REQUIREMENTS

A. Before drawings and specifications are issued for construction, they shall be submitted to all governing building agencies to insure their compliance with all applicable building codes, ordinances and local/state regulations including but not limited to : Florida Building Code, 2010 Florida Fire Prevention Code, 2010. If code discrepancies in drawings and/or specifications appear prior to and during construction, the Architect and/or Engineer shall be notified in writing of such discrepancies by the Contractor or Building Official, and allowed to alter drawings and specifications so as to comply with governing codes prior to and during construction.

B. All sub-contractors, suppliers and fabricators shall be responsible for the content of drawings and specifications and for the supply and design of appropriate materials and work performance.

C. All manufactured articles, materials and equipment shall be applied, installed, erected, used, cleaned and conditioned in strict accordance with manufacturer's recommendations.

01040 COORDINATION

A. Contractor shall supervise and direct the work competently and efficiently, devoting such attention thereto and applying such skills as may be necessary to perform the work in accordance with the Contract Documents.

B. Contractor shall be solely responsible for all means, methods, techniques, sequences and procedures of construction, and for providing adequate safety precautions and coordinating all portions of the work under the Contract Documents.

C. Contractor shall be responsible to see that the finished work complies accurately with the Contract Documents.

D. Contractor shall be responsible for all project coordination.

E. Coordinate scheduling, submittals, and work of the various Sections of Project Manual to assure efficient and orderly sequence of installation of construction elements, with provisions for accommodating items to be installed later.

F. Coordinate sequence of work to insure proposed completion dates are met.

G. In addition to progress meetings hold coordination meetings and pre-installation conferences with personnel and subcontractors to assure coordination of work.

H. Schedule review, submit and coordinate all submittals.

I. Coordinate work of various sections having interdependent responsibilities for installing, connecting to, and placing in service, such equipment.

J. Coordinate Testing Laboratory Services.

K. Coordinate with Subcontractors as Required.

L. Coordinate requests for changes to assure compatibility of space, of operating elements, and effect on other works .

M. Consult with Architect to obtain interpretation or clarifications for any portions of the Contract Documents which are unclear or ambiguous. Transmit all requests for interpretation in writing. Requests shall include suggested resolution(s).

N. Interpretations shall be based on the Architect/Engineer review of the Contract Documents. In case of conflicting data, assumption shall be made that the item of greater quality, cost or quantity was bid.

O. Direct the checkout of utilities, operational systems, and equipment.

P. Prior to determination of Substantial Completion of work or portion thereof, prepare for the Architect a list of incomplete or unsatisfactory items. This shall form basis for Punch List.

Q. After Owner occupancy of premises, coordinate access to site by various Sections for correction of defective work and work not in accordance with Contract Documents, to minimize disruption of Owner's activities.

R. Assemble and coordinate closeout submittals specified.

01090 DEFINITIONS AND STANDARDS

A. Specification Content: Because of methods by which this project specification has been produced, certain general characteristics of content, and conventions in use of language are explained as follows:

1. Specifying Methods: The techniques or methods of specifying record requirements varies throughout text, and may include to "prescriptive", "open generic descriptive", "compliance with standards" "performance", "proprietary", or a combination of these. The method used for specifying one unit of work has no bearing on requirements for another unit of work.

2. Overlapping and Conflicting Requirements: Where compliance with two (2) or more industry standards or sets of requirements is specified, and overlapping of those different standards or requirements establishes different or conflicting minimums or levels of quality, most stringent requirement (which is recognized to be also most costly) is intended and will be enforced, unless specifically detailed language written into Contract Documents (not by way of reference to an industry standard) clearly indicates that a less stringent requirement is be fulfilled. Refer apparently-equal-but-different to and uncertainties as to which level of quality is more stringent, to Architect/Engineer for a decision before proceeding.
   a. Contractor's Options: Except for overlapping or requirements, where more than one set of requirements specified for a particular unit of work, option is be Contractor's regardless of whether specifically intended to as such indicated.

3. Minimum Quality/Quantity: In every instance, quality level or quantity shown or specified is intended as minimum for the work to be performed or provided. Except as otherwise specifically minimum indicated, actual work may either comply exactly with that within (within specified tolerances), or may exceed that minimum reasonable limits. In complying with requirements, indicated or as numeric values are either minimums or maximums as noted appropriate for context of requirements. Refer instances of uncertainty to Architect/Engineer for decision before proceeding.

4. Specialists Assignments: In certain instances, specification text requires (or at least implies) that specific work be assigned to specialists or expert entities, who must be engaged for recognized performance of those units of work. These must be as special requirements over which Contractor has no choice or option. These assignments must not be confused with (and are not intended to interfere with) normal application of regulations union jurisdictions and similar conventions. One purpose of such assignments is to establish which party or entity involved in a specified unit of work is recognized as "expert" for indicated construction processes or operations. Nevertheless, final responsibility for fulfillment of entire set of requirements with Contractor.

5. Trades: Except as otherwise indicated, the use of title such as "carpentry" in specification text, implies neither that the work must be performed by an accredited or unionized tradesperson of corresponding generic name (such as "carpenter")" nor that specified requirements apply exclusively to work by tradespersons of that corresponding generic name.

6. Abbreviations: The language of specifications and other contract documents is of the abbreviated type in certain instances, and implies words and meanings which will be appropriately interpreted. Actual work abbreviations of a self-explanatory nature have been included in texts. Specific abbreviations have been established, principally for lengthy technical terminology and primarily in conjunction with coordination of specification requirements with notations on drawings and in schedules. These are frequently defined in section at first instance of use. Trade association names and titles of general standards are frequently abbreviated. Singular words will be interpreted as plural and plural words will be interpreted as singular where applicable and where full context of the Contract Documents so indicates.

01210 PROCEDURES AND PERFORMANCES

A. Observation: The Architect and his Consulting Engineers may review all the work including Architectural, Plumbing, Electrical and Mechanical on this project.

B. Measurements and Dimensions: Before ordering materials or doing work which is dependent for proper size, or installation upon coordination with building conditions, the Contractor shall verify all dimensions by taking measurements at the building and shall be responsible for the correctness of same. No consideration will be given any claim based on the difference between the actual dimensions and those indicated on the drawings and/or the specifications and the existing conditions shall be referred to the Architect for adjustment before any work affected thereby is begun.

C. Conflicts: Should there be a discrepancy in these documents, the Architect/Engineer and Owner's interpretation shall be that requiring the greater quantity or better quality. The Contractor shall provide the greater quantity or better quality at no increase in cost to the Owner.

01340 SUBMITTALS

A. Review by Architect of Record of submittals is for general conformance with the design concept as presented by the Contract Documents. No detailed check of quantities or dimensions will be made.

B. The Contractor is responsible for assuring that all submittals comply with the latest project plans, specifications, governing codes and regulations and is solely responsible for confirming all quantities, dimensions, fabrication techniques and coordinating work with all trades.

C. Shop drawings are to be submitted in a timely manner allowing adequate time for processing. An average submittal is reviewed by the Architect of Record within twenty-one (21) calendar days of receipt.

D. All shop drawings must bear evidence of the Contractor's approval prior to submitting to the Architect/Engineer of Record.

E. The Contract Documents are not to be reproduced for use as shop drawings.

F. Submit final approved shop drawings to the SPC's Building Code Administrator.

01410 TESTING LABORATORY SERVICES

A. Contractor will employ and pay for the services of an independent testing laboratory to perform specified testing. Testing to be provided by Owner includes, but is not limited to, HVAC test and balance.

B. Cooperate with laboratory personnel, provide access to work, or to manufacturer's operations.

01510 TEMPORARY FACILITIES

A. Furnish, install and maintain temporary utilities required for construction, remove on completion of work. Temporary utilities shall be maintained and paid for by the General Contractor until date of substantial completion or beneficial occupancy.
   1. Temporary lighting and power for all construction activities, including extension of temporary electrical service into building
   2. Temporary heat and ventilation.
   3. Temporary telephone.
   4. Temporary water for construction, including all distribution systems.
   5. Temporary sanitary facilities for construction personnel.
   6. Temporary fire protection system as required by local authorities.
   7. Provide and make available for use by subcontractors temporary light, power and water required in the performance of their work as part of the work of this Section.

B. Comply with Federal, State and local codes and regulations and with utility company requirements.

C. Materials shall be new or used, but must be adequate in capacity for the required usage, must not create unsafe conditions and must not violate requirements of applicable codes and standards.

01700 CONTRACT CLOSEOUT

A. Substantial Completion is hereby defined to be that time when the building, or portions thereof, is useable for the purpose intended.

B. Final Completion is hereby defined to be that time when the total and complete requirements of the Contract are satisfied.

C. On the date established for Substantial Completion by the Contract the Architect shall provide an on-site observation.

D. The Contractor will prepare a "Certificate of Substantial Completion", accompanied by the Contractor's list of items to be completed or corrected, as verified by the Architect. The Contractor will submit the Certificate to the Owner for their written acceptance. The Contractor's List of incomplete work and/or defective/deficient work shall be submitted to the Architect as the preliminary "Punch-List". The Architect shall use this List as his basis for observation for Substantial Completion. This List shall be augmented by the Architect and his consultants to form the final "Punch-List".

E. Prerequisites for Final Completion
   1. Substantial completion.
   2. Submit and have accepted Product Record Documents.
   3. Submit and have accepted Operation and Maintenance Data.
   4. Submit Warranty and Bonds.
   5. Transmit spare parts and maintenance materials.
   6. General Contractor shall certify that:
      a. Contract Documents have been reviewed±
      b. Work has been inspected for compliance with the Contract Documents.
      c. Work has been completed in accordance with the Contract Documents.
      d. Equipment and systems have been tested as required, and are operational± and
      e. Work is completed and ready for final inspection.
   7. Submit final payment request with final releases and supporting documentation not previously submitted and accepted. Include certificates of insurance for products and completed operations where required.
   8. Submit updated final statement accounting for additional (final) changes to Contract Sum.
   9. Submit certified copy of Architect's final Punch-List of work to be completed or corrected, stating that each item has been completed or otherwise resolved for acceptance, endorsed and dated by Architect.
   10. Submit final meter readings for utilities, measured record of stored fuel and similar data as of time of substantial completion or when Owner took possession of and responsibility for corresponding elements of the work.
   11. Submit original Consent of Surety.
   12. Submit Project Record Documents, maintenance manuals, final video and project photographs, damage or settlement survey, property survey and similar final record information.
   13. Complete final cleaning up requirements, including touch-up of marred surfaces.
   14. Touch-up and otherwise repair and restore marred exposed finishes.
   15. Revise and submit evidence final, continuing insurance coverage complying with insurance requirements.
   16. Mechanical
      a. Air System Test and Balance (prepared by Owner's independent agent).
      b. Piping pressure tests and certifications.
      c. Project certification.
   17. Electrical
      a. System tests.
      b. Project certification.
   18. Evidence of compliance with requirements of governmental agencies having jurisdiction including, but not necessarily limited to:
      a. Certificates of Inspection.
      b. Certificates of Occupancy.
   19. Certificates of Insurance for products and completed operations.
   20. Evidence of payment and release of liens.
   21. List of subcontractors, service organizations, and principal vendors, including names, addresses, and telephone numbers where they can be reached for emergency service at all times.

(Cont. CONTRACT CLOSEOUT)

F. Revise and submit evidence final, continuing insurance coverage Upon certification of Final Completion the Owner shall make final Payment in accord with the Contract.

04100 MASONRY MORTAR

A. Incorporate specified masonry mortar into sample panels specified in other sections.

B. Standard References:
   1. ASTM C-270-88a, Standard Specification for Mortar for Unit Masonry.
   2. Brick Institute of America, Technical Notes on Brick Construction (BIA).
   3. National Concrete Masonry Association, Manual of Facts on Concrete Masonry (NCMA - TEK). C. Testing 1. Masonry mortar may be lab tested during the course of the work.

C. Contractor shall submit mix designs by his independent laboratory.

D. Masonry cement mortar mixes shall not be acceptable.

E. All masonry mortar mixes shall be Portland cement-lime. Pre-bagged Portland cement-lime mortar mixes shall be acceptable provided they comply with the technical requirements of this section± with such, admixtures for workability are acceptable.

F. All masonry mortar shall be Type S except stem wall and that below grade shall be Type M.

G. Mix design shall be proportioned by volume consisting of one (1) part Portland cement or blended cement, one quarter (1/4) part hydrated lime or lime putty and not less than two and one-quarter (2-1/4) nor more than three (3) parts aggregate (measured in damp, loose conditions) of the separate volumes of cementitious materials.

H. There shall be a limit of one (1) air entraining admixture as reviewed and accepted.

I. Water shall be potable.

J. Calcium chloride shall not be added to any masonry mortar.

K. Portland cement shall be Type I, II or III at option of Contractor.

L. Mortar shall be mixed by powered batch mixer.

M. Place half of the required mix water and aggregate into mixer± mix two (2) minutes. Add all cement and lime and then remaining water and aggregate.

N. Mix all a minimum of three (3) minutes.

O. Hand mixing shall not be allowed.

P. Mortar shall be disposed of once ninety (90) minutes has passed since completion of initial mix completion.

Q. Mortar may be retempered to maintain plasticity during the above 90-minute period.

R. Retempering on mortar boards shall be done by forming a basin in mortar, then worked into the water filled basin during the above 90-minute period.

S. Should a masonry unit need removal and replacement, saw cut at joints, remove unit, clean off all mortar and re-install with fresh mortar.

T. Imbed any reinforcing or accessories specified in other Sections.

U. Fill all first course cells atop foundations, lintels, beams, etc. with mortar.

V. Provide one #5 and fill all jamb cells vertically at masonry openings. Should cells have additional reinforcing or have concrete or grout, see other sections.

W. ill all top course cells with mortar unless noted otherwise.

X. ertical reinforcing shall be doweled top and bottom into slabs and beams respectively.

04200 CONCRETE MASONRY UNIT

A. Provide ASTM C-129, Type II, modular concrete blocks.

B. Dimensions
   1. Provide units required by drawings± thickness shall be dimensioned as noted.
   2. Nominal sizes shall be: 4"x 8"x 16", 6"x 8"x 16", 8"x 8"x 16", 12"x 8"x 16".
   3. Provide "half" units where required.
   4. Provide accessory units where shown.
   5. Provide bull nose units at all interior corners.

C. Unless specifically noted or otherwise required, provide natural gray units.
   1. Provide colored units where required - see exterior elevations and wall sections for colors and locations.

D. Provide ASTM C-90, C-145, or C-55, Type N-II, Grade I modular concrete blocks. Provide CMU net compressive strength as indicated on the structural drawings.

E. Dimensions:
   1. Provide units required by drawings± thickness shall be dimensioned as noted.
   2. Nominal sizes shall be: 4"x 8"x 16", 6"x 8"x 16", 8"x 8"x 16", 12"x 8"x 16".
   3. Provide "half" units where required. 4. Provide accessory units where shown

F. Unless specifically noted or otherwise required, provide natural gray units.
   1. Provide colored units where required - see exterior elevations and wall sections for colors and locations.

G. Certifications:
1. Units shall be certified as being tested or calculated.
2. Tested units shall be UL per the following:
a) 4 Hour: B-4 b) 3 Hour: C-3 c) 2 Hour: D-2 d) 1 Hour: See 3-D below
3. Calculated units shall have the following equivalent thickness:
a) 4 Hour: minimum 6 inches
b) 3 Hour: minimum 5 inches
c) 2 Hour: minimum 4 inches
d) 1 Hour: minimum 2.7 inches
H. Vertical reinforcement shall be as specified in Section 03200.
I. Filled cell grouting at vertical reinforcement shall be as specified in Section 03300.
J. Vertical reinforcement shall be secured in place with hot dip galvanized 9 gauge steel pre-manufactured reinforcement positioner.
K. Coordination
1. Coordinate placement of vertical dowels/reinforcing/grout.
2. Coordinate placement of dovetail slots into previously placed concrete structure.
3. Coordinate placement of anchorages to previously set steel structure.
4. Mortar shall be per Section 04100. % of the ASTM allowable defects. Such allowable defects shall also be patched as directed by Architect to present uniform appearances. Contractor shall "cull" and place units with best sides
L. The visual quality control of all masonry units shall be per ASTM specifications except that in exposed masonry there shall only be 50 exposed to view.
M. Masonry units shall be laid dry, clean, cured and free of cracks. During hot and dry weather conditions (when units are "warm") units shall be wetted with a light fog spray.
N. Cells shall be void unless noted otherwise.
O. Horizontal joint alignment shall be true to plane and shall course out to be 8" for each masonry unit and mortar joint. P. Reinforcement and Miscellaneous
1. Horizontal reinforcement shall be located atop each first course above beams, foundations, slabs, etc. and alternating successive courses.
2. Pre-formed inside and outside corners and running reinforcement shall be fully imbedded into the horizontal joint.
3. Coordinate vertical reinforcement± secure with positioners.
4. At intersections to previously cast concrete, install dovetail anchors at same spacing as horizontal reinforcing± dovetail slots shall have been placed into the cast concrete. Center in wythe width. Provide dual slots/anchors at dual wythe walls. Install steel ties similarly spaced. Extend horizontal reinforcing through tie columns placed after masonry erection.

06100 ROUGH CARPENTRY

A. Lumber (for blocking, nailers, furring, cant strips, grounds, and similar members): Comply with dry size requirements of PS-20, Douglas Fir WWPA No. 3, or SFPA No. 2.
   1. Thoroughly seasoned, well fabricated materials of longest practical lengths and sizes.
   2. Free of non-correctable warp.
   3. Discard material which would impair quality of work.

B. Plywood: PSI, Exterior Type, A-C Grade.
   1.. Provide MDO-EXT-APA plywood, where indicated.

C. Preservative-Treated Material
   1. Provide preservative-treated material for all material in contact with masonry or concrete.
   2. Treated lumber standard: AWPA C-2.
   3. Treated plywood standard: AWPA C-9.
   4. Preservative-treatment standard: AWPA P-5.
   5. Kiln dry treated material to fifteen percent (15%) moisture content.
   6. Where possible, precut material before treatment.
   7. Use preservative treatment on material used in conjunction with roofing which is acceptable to the specified system.

D. Anchorage and fastening materials: Proper type, size, material and finish for application.

E. Fire retardant lumber shall not be used at any location.

07190 UNDERSLAB VAPOR BARRIER

A. Manufacturer's standard low-permeance polymer membrane, thickness as indicated for intended application.

B. Vapor barrier shall meet or exceed Class C (for 10 mil thickness) requirements as established by ASTM E1745.
   1. Reef Industries "Griffolyn 10 mil".
   2. Stego Industries LLC "Stego Wrap (10 mil) Vapor Barrier".

C. Vapor barrier accessory materials including pipe boots, tapes and adhesives, shall be as recommended by the vapor barrier manufacturer.

D. Unroll vapor barrier with the longest dimension parallel with the direction of the concrete pour.

E. Lap vapor barrier over footings and seal to foundation walls, extending barrier up walls minimum 2 inches above the thickness of slabs. At thickened edge slabs, extend barrier under thickened edge and up to grade. Overlap joints six inches and seal with manufacturer's recommended pressure sensitive tape.

07200 BUILDING INSULATION

A. Board insulation:
NA

B. Sound Attenuation Batt Insulation:
   1. Shall be fiberglass thermal batts, unfaced.
   2. R value: 11.
   3. Batts shall be 16 or 24 inches wide by length required.
   4. Friction fit.

C. Vinyl Coated Roof Insulation: Fiberglass blanket insulation. 3" thick. Faced one side with nominal 4 mil. white vinyl. MBCI or equal.

07546 TPO THERMOPLASTIC SINGLE-PLY ROOFING

A. MANUFACTURERS: Basis for Design: Product by manufacturer: GAF, Commercial Roofing Products, which is located at: 1361 Alps Rd. ± Wayne, NJ 07470± Toll Free Tel: 800-ROOF-411± Tel: 973-628-3000± Fax: 973-628-3451± Email: request info (cfontenot@gaf.com)± Web: www.gaf.com . Other Acceptable Manufacturers: John Manville and Firestone, with Architect's approval.

B. INSULATION:
   1. Rigid polyisocyanurate board, with a strong white or black fibrous glass facer conforming to or exceeding the requirements of ASTM C 1289 / FS HH-I-1972, EnergyGuard Polyiso, with the following characteristics:
   2. Board Thickness: As required min. R-20± Slope to be 1/8" per foot minimum or as shown on the drawings.
      a. Other rigid polyisocyanurate board insulation as required for installation, tapered and non-tapered.
      b. Polyisocyanurate board as listed in Section 3.06, below.

C. ROOF BOARD** NOTE TO SPECIFIER ** Delete roof board types not required.: Fiber-reinforced gypsum panel with an integral water-resistant core. Securock Roof Board by US Gypsum.
   1. Board Thickness: 1/2 inch (6mm).
   2. Thermal Resistance (R value) of: 0.40

D. INSULATION ACCESSORIES: Tapered Edge Strip: Factory fabricated rigid perlite strip cut at angles to provide a smooth transition between differences in elevation. EnergyGuard Tapered Edge Strip, by GAF.

E. MEMBRANE MATERIALS: Advanced heat and UV protected, smooth type, polyester scrim reinforced thermoplastic polyolefin membrane with a nominal 0.060 inch (60mil) thickness, for use as a single ply roofing membrane. UL Listed, FM Approved, CRRC rated and Title 24 compliant. Each full roll contains approximately 1000 sq. ft. of roofing material, 10 feet x 100 feet, weighing 322 lbs. Each half sheet roll contains approximately 500 sq. ft. of roofing material, 5 feet x 100 feet, weighing 162 lbs.

F. FLASHING MATERIALS: Advanced heat and UV protected, smooth type, polyester scrim reinforced thermoplastic polyolefin membrane with a nominal 0.060 inch (60mil) thickness, for use as a single ply roofing membrane. UL Listed, FM Approved, CRRC rated and Title 24 compliant. A full roll contains approximately 1000 sq. ft. of roofing material at 10 feet X 100 feet, weighing 322lbs.or 800 sq. ft. of roofing material at 8 feet x 100 feet, weighing 256.6 lbs. A half sheet roll has approximately 500 sq. ft. of roofing material at 5 feet X 100 feet, weighing 162 lbs. or 400 sq. ft. of roofing material, weighing 128.8 lbs. EverGuard Extreme TPO - 60 mil thermoplastic single-ply roofing membrane by GAF (misc. flashings).

G. BITUMEN: Asphalt bitumen: ASTM D 312 Type III & IV.

H. ADHESIVES, SEALANTS AND PRIMERS
   1. Solvent-based Bonding Adhesive: Solvent based adhesive for use with EverGuard TPO membranes, EverGuard 1121 Bonding Adhesive, by GAF.
   2. Low VOC solvent based primer for preparing surfaces to receive butyl based adhesive tapes, EverGuard TPO Low VOC Primer, by GAF.
   3. Solvent based seam cleaner used to clean exposed or contaminated seam prior to heat welding, EverGuard TPO Seam Cleaner, by GAF.
   4. Commercial grade roofing sealant suitable for sealing the upper lip of exposed termination bars and penetrations and around clamping rings and comes with a 20 yr ltd warranty against leaks caused by manufacturing defects. TOPCOAT FlexSeal Roof Sealant, by GAF.

I. ACCESSORIES
   1. PLATES AND FASTENERS: DrillTec Standard Screws: Standard duty alloy steel insulation fastener with CR-10 coating with a 0.215 inch diameter thread. Factory Mutual Standard 4470 Approved, #3 Phillips head for use on steel and wood decks.Or approved equal.
   2. FLASHING ACCESSORIES
      a. A 6 inch wide, 0.045 mil reinforced TPO membrane with a 3-inch self-adhered area and a 3-inch heat-weld area. Designed for use as a cover strip over coated and non-coated metal edges and flanges. Each full roll contains approximately 100 lineal feet of material, EverGuard TPO Cover Tape Heat-Weld, by GAF.
      b. 0.045 inch reinforced TPO membrane with pressure sensitive adhesive to be installed on horizontal surfaces using plates and fasteners as a base attachment in fully adhered systems. Size 6 inches x 100 feet, EverGuard RTA (Roof Transition Anchor) Strip, by GAF.
      c. A two-part assembly with a rigid terminator base plate, and a decorative snap-on fascia cover for single-ply roofs with raised perimeter edges. The system shall have all concealed fasteners with no penetration on horizontal roof surface available in 10 foot lengths, EverGuard EZ Fascia by GAF.
      d. Decorative metal fascia with continuous galvanized steel spring cant to terminate single-ply roofing at perimeter. The system shall be watertight with concealed splice plates and no exposed fasteners available in 10-foot lengths, EverGuard Snap-on Fascia by GAF.
      e. Extruded aluminum termination bar with angled lip caulk receiver and lower leg bulb stiffener. Pre-punched slotted holes at 6 inches on center or 8 inches on center. 3/4 inch x 10 feet with 0.090 inch cross section, EverGuard Termination Bar, by GAF.
   3. WALL AND CURB ACCESSORIES: 55 mil TPO membrane and 24 gauge coated metal prefabricated into standard and custom size thru-wall scuppers. Available in two sizes: 4 inch x 6 inch x 12 inch (l x w x d) with a 5.75 inch x 3.75 inch opening and 8 inch x 10 inch x 12 inch (l x w x d) with a 9.75 inch x 7.75 inch opening, EverGuard Extreme TPO Scupper, by GAF.
   4. PENETRATION ACCESSORIES: 0.075 inch thick molder TPO membrane sized to accommodate most common pipe and conduits (1 inch to 6 inch diameter pipes), including square tube. Hot-air welded directly to EverGuard TPO membrane, supplied with stainless steel clamping rings. EverGuard Extreme TPO Preformed Vent Boots by GAF.
   5. FIELD OF ROOF ACCESSORIES: Pre-manufactured expansion joint covers used to bridge expansion joint openings in a roof structure. Fabricated to accommodate all applications of roof-to-wall and roof-to-roof, made of 060 inch reinforced TPO membrane, available in 5 standard sizes for expansion joint openings up to 8 inch wide. EverGuard Extreme TPO Expansion Joint Covers, by GAF.

J. EXAMINATION
   1. Verify that the surfaces and site conditions are ready to receive work. Verify that the deck is supported and secured.
   2. Verify that the deck is clean and smooth, free of depressions, waves or projections, and is properly sloped to drains, valleys, eaves, scuppers or gutters.
   3. Verify that the deck surfaces are dry and free of water or ice.
   4. Verify that all roof openings or penetrations through the roof are solidly set and that all flashings are tapered.

K. SUBSTRATE PREPARATION: See manufacturer's recommendations.

L. INSTALLATION: See manufacturer's recommendations

M. INSULATION: See manufacturer's recommendations

P. VERSASHIELD SOLO (Verify if installation is required by Roofing Installer/Contractor)
   1. Install VersaShield Solo loose-applied over substrate surface so that wrinkles and buckles are not formed perpendicular to the direction of the TPO membrane.
   2. Overlap membrane a minimum 2 inches at the side laps and minimum of 4 inches at the end laps.
   3. Use corrosive resistant nails with 1 inch diameter metal head or plastic caps to fasten in place.
   4. Only use enough fasteners to hold in place until primary roof covering is in place.
   5. Do not install more VersaShield Solo than can be covered in one day.

Q. MEMBRANE APPLICATION: See manufacturer's recommendations

R. FLASHINGS: See manufacturer's recommendations

S. ROOF PROTECTION
   1. Protect all partially and fully completed roofing work from other trades until completion.
   2. When possible, stage materials in such a manner that foot traffic is minimized over completed roof areas. When it is not possible to stage materials away from locations where partial or complete installation has taken place, temporary walkways and platforms shall be installed in order to protect all completed roof areas from traffic and point loading during the application process.
   3. Temporary tie-ins shall be installed at the end of each workday and then removed prior to the beginning work of the following day.

07600 FLASHING AND SHEET METAL

A. Gauges of metal used in flashing and sheet metal work shall be as specifically designated on the Drawings. When the Drawings omit specifying a particular gauge, such shall be of the gauges set forth in the following descriptions of particular metals. % copper, complying with ASTM A525 and ASTM A526 G90 hot dip galvanized, of American manufacturer. back prime in accordance with the painting Section of these

B. Galvanized steel sheet metal: 24 gauge, zinc coated sheet steel, hot dipped galvanized carbon steel with 02 Specifications.

C. Fasteners: Hot dipped galvanized conforming to ASTM - 153 latest edition, or cadmium plated, (or stainless steel used in stainless steel construction). Fastenings shall match particular sheet metal materials to which applied. Nails and screws shall have sufficient length to penetrate all metal and fabric materials and into wood support by 3/4" minimum and shall be capable of 40 lb. each minimum initial withdrawal.
   1. Flashing nails shall be a minimum of 11 gauge, barbed, with 5/8" diameter heads, by 2" with tin caps.
   2. Galvanized tin caps shall be 1" or 2" diameter and 28-30 gauge flat sheet metal.
   3. Integral capped flashing nail (simplex type) with round head, galvanized, 1/8" minimum.

D. Sealing compound shall be of a single component gungrade synthetic polyurethane base complying with TT-S-00230C Class A, Type II Non-Sag. Color shall be as selected by the Project Architect/Engineer. Following products approved, subject to compliance with these specifications:

Mameco	Vulkem 116	
Pecora	Dynatrol I	
Sika	Sikaflex 1A	
Sonneborn	Sonolastic NPL	
Tremco	Dymonic	

E. Solder: ASTM B32, 50% pig lead, 50% black tin.

F. Flux: Muriatic acid 'killed' with zinc or suitable brand of prepared soldering flux. K. Metal work for gravel stops, roof membrane stops (without gravel), gutters, downspouts, scuppers, counter flashing, expansion joint covers, coping caps/covers, and other work, shall be fabricated and installed as shown in details with this Specification Section and/or on the Contract Drawings. Otherwise, all metal work shall be in accordance with best trade practices and as set forth in The SMACNA Manual.
   1. Perimeter edge metal gravel stops shall be 0.050 mill finish aluminum, 4 inch (minimum) nailing flange, with hemmed edge kickout. At the joints, a cover plate and bottom joint plate shall be installed.

G. Thermal expansion shall be provided for in all exposed sheet metal work exceeding 10'-0" in running length, except where otherwise indicated:
   1. On flashing, gravel stops, coping caps and trim, expansion capability shall be on 10'-0" maximum spacing, and located 2'-0" from corners and intersections.
   2. Gutters shall be provided with expansion capability at intervals no greater than 50'0".

H. Fasteners and expansion provisions shall be concealed wherever possible.

07900 JOINT SEALANTS

A. Exterior joints in vertical surfaces and nontraffic horizontal surfaces as indicated below:
   1. Control and expansion joints in cast-in-place concrete.
   2. Control and expansion joints in unit masonry.
   3. Joints between different materials.
   4. Perimeter joints between materials and frames of doors and windows.
   5. Control and expansion joints in ceiling and overhead surfaces.
   6. Other joints as indicated.

B. Exterior joints in horizontal traffic surfaces as indicated below:
   1. Control, expansion, and isolation joints in cast-in-place concrete slabs.
   2. Joints between different materials.
   3. Other joints as indicated.

C. Interior joints in vertical surfaces and horizontal nontraffic surfaces as indicated below:
   1. Control and expansion joints on exposed interior surfaces of exterior walls.

D. Perimeter joints of exterior openings where indicated.

E. Vertical control joints on exposed surfaces of interior unit masonry and concrete walls and partitions.

F. Perimeter joints between interior wall surfaces and frames of interior doors, windows.

G. Perimeter joints of toilet fixtures.

H. Other joints as indicated.

I. Interior joints in horizontal traffic surfaces as indicated below:
   1. Control and expansion joints in cast-in-place concrete slabs.
   2. Control and expansion joints in tile flooring.
   3. Other joints as indicated.

08100 METAL DOORS AND FRAMES

A. Steel Doors: Provide 1-3/4-inch-thick doors of materials and SDI-100/ANSI A250.8 grades and models specified below.
   1. Interior Doors: Grade II, heavy-duty, Model 1, full flush design, minimum 18 gage, 0.0516-inch-thick galvanized steel sheet faces, where indicated on the door schedule.
   2. Exterior Doors: Grade III, extra heavy-duty, Model 1, full flush design, minimum 16 gage, 0.0635-inch-thick galvanized steel sheet faces, where indicated on the door schedule.

B. Door Louvers: Provide louvers according to SDI 111C for interior doors where indicated, with blades or baffles formed of 24 gage, 0.0239-inch-thick cold-rolled steel sheet set into minimum 20 gage, 0.0359-inch-thick steel frame (where applicable).
   1. Sight-Proof Louvers: Stationary louvers constructed with inverted V-shaped or Y-shaped blades.

C. Doors shall be full-flush seam on edge construction. Doors shall be reinforced, stiffened, sound deadened and insulated with impregnated kraft honeycomb core completely filling the inside of the doors and laminated to inside faces of both panels using contact adhesive applied to both panels and honeycomb core. Doors shall have continuous vertical mechanical interlocking joints at lock and hinges edges with visible edge seams. The internal portion of the seam shall be sealed with epoxy. Top and bottom steel reinforcement channels shall be 14-gauge and spot welded to both panels. Hinge reinforcements shall be 8-gauge, lock reinforcements shall be 16-gauge and closer reinforcements shall be a 14-gauge box minimum 20 inches long. Hinge and lock reinforcements shall be projection welded to the edge of the door. Galvanized doors shall have galvanized hardware reinforcements. Adequate reinforcements shall be provided for other hardware as required.

D. All exterior swing-out doors shall have the tops closed to eliminate moisture penetration. Door tops shall not have holes or openings. Top caps are permitted.

E. All doors shall be fully beveled 1/8 inch in 2 inches on the hinge and lock edges. Square edges on the hinge and or lock sides will not be permitted.

F. Provide metal frames for doors, transoms, sidelights, borrowed lights, and other openings, according to SDI-100/ANSI A250.8, and of types and styles as shown on drawings and schedules. Conceal fastenings, unless otherwise indicated.
   1. Fabricate frames with mitered or coped and continuously welded.
   2. Fabricate frames for interior openings from 16 gage, 0.0598-inch-thick steel sheet.
   3. Form interior frames, in masonry openings, from 16 gage, 0.0635-inch-thick galvanized steel sheet.
   4. Form exterior frames from 14 gage, 0.0785-inch-thick galvanized steel sheet.

G. Door Silencers: Except on weatherstripped frames, drill stops to receive 3 silencers on strike jambs of single-door frames and 2 silencers on heads of double-door frames. Supply silencers in the frames. Stick-on silencers shall not be permitted.

H. Plaster Guards: Provide minimum, 26 gage, 0.0179-inch-thick steel plaster guards or mortar boxes at back of hardware cutouts where mortar or other materials might obstruct hardware operation and to close off interior of openings.

I. Grout: When required, as specified in 4200 - unit masonry.

J. Welded frames shall be supplied set up with faces arc welded and ground smooth. Miters of frames shall be back welded. Welds shall penetrate the outside face. Faces shall be dressed smooth. Filler materials are not permitted.

K. Frames in all walls shall have 2 inch head faces and 2 inch jamb faces. Other frames shall have 2 inch faces. Miter corners shall have reinforcements with four integral tabs for secure and easy interlocking of jambs to head.

L. Frames shall be furnished with a minimum of 6 wall anchors and 2 adjustable base anchors of manufacturer's standard design.

M. View panel frames shall be fabricated from 16-gage, cold-rolled steel with fully welded corners ground smooth.

N. Fabricate steel door and frame units to be rigid, neat in appearance, and free from defects, warp, or buckle. Where practical, fit and assemble units in manufacturer's plant. Clearly identify work that cannot be permanently factory assembled before shipment, to assure proper assembly at project site. Comply with sdi-100/ansi a250.8 requirements.

O. Tolerances: Comply with SDI 117 "Manufacturing Tolerances Standard Steel Doors and Frames."

P. Fabricate concealed stiffeners, reinforcement, edge channels, louvers, and moldings from cold-rolled steel sheet.

Q. Exposed fasteners: unless otherwise indicated, provide countersunk flat phillips heads for exposed screws and bolts.

R. Comply with applicable requirements of SDI 107 and ANSI A115 series specifications for door and frame preparation for hardware.

S. Frames for 1-3/4 inch thick doors shall have 8-gage steel hinge reinforcements. Strike reinforcements shall be 16-gage and prepared for an ANSI-A115.1-2 strike. All hinge and strike reinforcements shall be projection welded to the door frame.

T. Galvanized frames shall have galvanized hardware reinforcements.

U. Reinforcements for surface closer shall be 14 gage steel.

V. For concealed overhead door closers, provide space, cutouts, reinforcing, and provisions for fastening in top rail of doors or head of frames, as applicable.

W. Reinforce doors and frames to receive surface-applied hardware. Drilling and tapping for surface-applied hardware may be done at project site.

X. Locate hardware as indicated on Shop Drawings or, if not indicated, according to the Door and Hardware Institute's (DHI) "Recommended Locations for Architectural Hardware for Standard Steel Doors and Frames."

Y. Glazing stops: minimum 20 gage, 0.0359-inch-thick steel or 0.0040-inch-thick aluminum.

Z. Provide nonremovable stops on outside of exterior doors and on secure side of interior doors for glass, louvers, and other panels in doors. Snap on attachments will not be permitted.

AA. Provide screw-applied, removable, glazing beads on inside of glass, louvers, and other panels in doors.

BB. The inside of all frames in exterior and masonry walls shall be fully grouted and, when an antifreeze agent is used in the grout mixture, the insides of the frames shall be coated with a fibered asphalt coating. Coating shall be furnished and field applied by the Contractor to a minimum 60 mil thickness.

CC. All doors, frames and frame components, including galvanized surfaces, shall be cleaned, phosphatized and finished as standard with one coat of baked-on rust inhibiting prime paint in accordance with ANSI A224.1 "Test Procedure and Acceptance Criteria for Prime Painted Steel Surfaces for Steel Doors and Frames".

DD. Provide doors and frames complying with SDI-100/ANSI A250.8 "Recommended Specifications for Standard Steel Doors and Frames", ANSI A250.4 and as specified. Test reports shall be submitted upon request.

EE. Provide steel doors and frames manufactured by a single firm specializing in production of this type work.

FF. Fire-Rated Door Assemblies: Units that comply with NFPA 80, are identical to door and frame assemblies tested for fire-test-response characteristics per NFPA 252, and are labeled and listed by UL, Warnock Hersey, or another testing and inspecting agency acceptableto authorities having jurisdiction.

GG. Test Pressure: Test at atmospheric pressure.

HH. Underwriter's Laboratories labeled doors and frames shall be manufactured under the UL factory inspection program and in strict compliance to UL procedures, and shall provide a degree of fire protection, heat transmission and panic loading capability indicated by the opening class.

II. A raised metal tag shall be permanently affixed at an authorized facility, to the hinge side of fire door and fire door frame as evidence of compliance with procedures of the labeling agency.

08200 WOOD DOORS

A. Source Limitations: Obtain flush wood doors through one source from a single manufacturer.

B. Quality Standard: Provide doors meeting or exceeding the latest edition of the minimum standard as set forth by the following organizations and carry the NWWDA "Quality Certified Stamp."
   1. NWWDA Quality Standard: NWWDA I.S.1-A, "Architectural Wood Flush Doors."
   2. AWI Quality Standard: AWI's "Architectural Woodwork Quality Standards, Section 1300" for grade of door, core, construction, finish, and other requirements exceeding those of NWWDA quality standard.

C. Fire-Rated Wood Doors: Doors complying with NFPA 80 that are listed and labeled by UL, Warnock Hersey or another testing and inspecting agency acceptable to authorities having jurisdiction, for fire ratings indicated, based on testing according to NFPA 252.
   1. Test Pressure: Test at atmospheric pressure.
   2. Temperature-Rise Rating: At stairwell enclosures, provide doors that have a temperature-rise rating of 450 degrees F maximum in 30 minutes of fire exposure.
   3. A raised tag shall be permanently affixed, at an authorized facility, to the hinge side of the fire door as evidence of compliance with procedures of the labeling agency.

D. Doors for Transparent Finish: Comply with the following requirements:
   1. Grade: Premium (Grade A faces)
   2. Faces: MATCH EXISTING INSTALLED WOOD DOORS
   3. Match between Veneer Leaves: Book match.
   4. Match within Door Faces: Balance match.
   5. Pair and Set Match: Provide for pairs of doors and for doors hung in adjacent sets. Where adjacent pairs are shown, pairs will be from the same flitch and match each other in color and grain.

THIS DOCUMENT CONTAINS COPYRIGHTED MATERIAL AND TRADE SECRET INFORMATION BELONGING EXCLUSIVELY TO WILLIAMSON DACAR ASSOCIATES, INC. ANY UNAUTHORIZED USE, DISCLOSURE, DISSEMINATION OR DUPLICATION OF ANY OF THE INFORMATION CONTAINED HEREIN MAY RESULT IN LIABILITY UNDER APPLICABLE LAWS.

WILLIAMSON DACAR ASSOCIATES® INCORPORATED
Architecture Planning Engineering
ARCHITECTURE / ENGINEERING / PLANNING
15500 LIGHTWAVE DRIVE SUITE 106
CLEARWATER, FL. 33760
PH (727) 725-0951 www.williamsondacar.com
Architect: AA 0002541
Engineering: EB 0006884

WELLINGTON GREEN PARCEL "F"
PHASE II RETAIL "H" MODIFICATION
PETITION NO. 16-18 (2016-08 ASA 53)
2545 SOUTH STATE ROAD 7
WELLINGTON, FLORIDA 33414

Revisions of Drawings

No.	Date	Revisions
-	-	-
-	-	-
-	-	-
-	-	-
-	-	-
-	-	-
-	-	-
-	-	-

Issues of Drawings

No.	Date	Issues
1	06.15.16	100% CD - PERMIT SET
-	-	-
-	-	-
-	-	-
-	-	-
-	-	-
-	-	-
-	-	-

Phase: CD
Checked: TW
Drawn: JA

Drawing Title: SPECIFICATION SHEET

WDA Proj. No.: 1526-01
Owner Proj. No.:
Scale: AS NOTED
Sheet No.: T.3
No. of Sheets.: _ _

SPECIFICATIONS

03491 GLASS-FIBER REINFORCED CONCRETE

A. GFRC MATERIALS
1. Portland Cement: ASTM C 150/C 150M: Type I, II, or III.
   a. For surfaces exposed to view in finished structure, use ¾gray% ¾white% of same type, brand, and source throughout GFRC production.
2. Metakaolin: ASTM C 618, Class N.
3. Glass Fibers: Alkali resistant, with a minimum zirconia content of 16 percent, 1 to 2 inches (25 to 50 mm) long, specifically produced for use in GFRC, and complying with ASTM C 1666/C 1666M.
4. Sand: Washed and dried silica, complying with composition requirements in ASTM C 144; passing a No. 20 (0.85-mm) sieve with a maximum of 2 percent passing a No. 100 (0.15-mm) sieve.
5. Facing Aggregate: ASTM C 33/C 33M, except for gradation, and PCI MNL 130, 1/4-inch (6-mm) maximum size.
   a. Aggregates: Selected, hard, and durable; free of material that reacts with cement or causes staining; to match sample.
   b. Fine Aggregate: Natural or manufactured sand with a maximum of 5 percent passing a No. 100 (0.15-mm) sieve and a maximum of 3 percent passing a No. 200 (0.075-mm) sieve.
6. Coloring Admixture: ASTM C 979/C 979M, synthetic mineral-oxide pigments or colored water-reducing admixtures, temperature stable, nonfading, and alkali resistant.
7. Water: Potable; free from deleterious material that may affect color stability, setting, or strength of GFRC and complying with chemical limits in PCI MNL 130.
8. Polymer-Curing Admixture: Acrylic thermoplastic copolymer dispersion complying with PCI MNL 130.
9. Air-Entraining Admixture: ASTM C 260/C 260M, containing not more than 0.1 percent chloride ions.
10. Chemical Admixtures: ASTM C 494/C 494M, containing not more than 0.1 percent chloride ions.

B. PANEL FRAME MATERIALS
1. Cold-Formed Steel Framing: Manufacturer's standard C-shaped steel studs, complying with AISI's "North American Specification for the Design of Cold-Formed Steel Structural Members," with minimum uncoated steel thickness of 0.053 inch (135 mm¾ of web depth indicated⅛ with stiffened flanges, U-shaped steel tracks and of the following steel sheet:
2. Hollow Structural Sections: Steel tubing, ASTM A 500/A 500M, Grade B, or ASTM A 513, finished as follows:
   a. Finish: Shop primed with organic zinc-rich primer complying with SSPC-Paint 20 on surfaces prepared to comply with SSPC-SP 6/NACE No. 3, "Commercial Blast Cleaning."
   b. Finish: Shop primed with paint complying with MPI#79 on surfaces prepared to comply with SSPC-SP 2, "Hand Tool Cleaning," or better.
3. Steel Channels and Angles: ASTM A 36/A 36M, finished as follows:
   a. Finish: Shop primed with organic zinc-rich primer complying with SSPC-Paint 20 on surfaces prepared to comply with SSPC-SP 6/NACE No. 3, "Commercial Blast Cleaning."
   b. Finish: Shop primed with paint complying with MPI#79 on surfaces prepared to comply with SSPC-SP 2, "Hand Tool Cleaning," or better.

C. GFRC MIXES
1. Mist Coat: Portland cement, sand slurry, and admixtures; of same proportions as backing mix without glass fibers.
2. Face Mix: Proportion face mix of portland cement, sand, facing aggregates, and admixtures to comply with design requirements.
3. Backing Mix: Proportion backing mix of portland cement, glass fibers, sand, and admixtures to comply with design requirements. Provide nominal glass-fiber content of not less than 5 percent by weight of total mix.
4. Polymer-Curing Admixture: 6 to 7 percent by weight of polymer-curing admixture solids to dry portland cement.
5. Air Content: 8 to 10 percent; ASTM C 185.
6. Coloring Admixture: Not to exceed 10 percent of cement weight.

D. PANEL FRAME FABRICATION
1. Fabricate panel frames and accessories plumb, square, true to line, and with components securely fastened.
   a. Fabricate panel frames using jigs or templates.
   b. Cut cold-formed metal framing members by sawing or shearing; do not torch cut.
   c. Fasten cold-formed metal framing members by welding. Comply with AWS D1.3/D1.3M.
   d. Fasten framing members of hollow structural sections, steel channels, or steel angles by welding. Comply with AWS D1.1/D1.1M.
   e. Weld anchors to panel frames.
2. Reinforce framing assemblies, as necessary, to withstand erection stresses.
3. Galvanizing Repair: Touch up damaged galvanized surfaces according to ASTM A 780/A 780M.
4. Painting Repair: Touch up damaged painted surfaces using same primer.

E. MOLD FABRICATION
1. Construct molds that result in finished GFRC complying with profiles, dimensions, and tolerances indicated, without damaging GFRC during stripping. Construct molds to prevent water leakage and loss of cement paste.
   a. Coat contact surfaces of molds with form-release agent.
   b. Coat contact surfaces of molds with surface retarder.
2. Place form liners accurately to provide finished surface texture indicated. Provide solid backing and supports to maintain stability of liners during GFRC application. Coat form liner with form-release agent.
3. Locate, place, and secure flashing reglets accurately.

F. GFRC FABRICATION
1. Proportioning and Mixing: For backing mix, meter sand/cement slurry and glass fibers to spray head at rates to achieve design mix proportions and glass-fiber content according to PCI MNL 130 procedures.
2. Spray Application: Comply with general procedures as follows:
   a. Spray mist coat over molds to a nominal thickness of 1/8 inch (3 mm) on planar surfaces.
   b. Spray or place face mix in thickness indicated on Shop Drawings.
   c. Proceed with spraying backing mix before ¾face mix⅛ ¾mist coat⅛ has set, using procedures that produce a uniform thickness and even distribution of glass fibers and matrix.
   d. Consolidate backing mix by rolling or other technique to achieve complete encapsulation of glass fibers and compaction.
   e. Measure thickness with a pin gage or other acceptable method at least once for every 5 sq. ft. (0.5 sq. m) of panel surface. Take no fewer than six measurements per panel.
3. Hand form and consolidate intricate details, incorporate formers or infill materials, and overspray before material reaches initial set to ensure complete bonding.
4. Attach panel frame to GFRC before initial set of GFRC backing, maintaining a minimum clearance of 1/2 inch (13 mm) from GFRC backing, and without anchors protruding into GFRC backing.
5. Build up homogeneous GFRC bonding pads over anchor feet, maintaining a minimum thickness of 1/2 inch (13 mm) over tops of anchor feet, before initial set of GFRC backing. Measure bonding pad thickness at 25 percent of anchor locations.
6. Inserts and Embedments: Build up homogeneous GFRC bosses or bonding pads over inserts and embedments to provide enough anchorage and embedment to comply with design requirements.
7. Curing: Employ initial curing method that ensures sufficient strength for removing units from mold. Comply with PCI MNL 130 procedures.
   a. Keep moisture off of the surfaces of mixes with polymer curing admixtures during the first three hours of curing. Maintain temperature between 60 and 120 deg F (16 and 49 deg C) during the first 16 hours.
   b. Prevent drying of moist curing mixes during the first 24 hours. Maintain units in surface-damp condition at a temperature above 60 deg F (16 deg C) and 95 percent relative humidity for seven days.
8. Panel Identification: Mark each GFRC panel to correspond with identification mark on Shop Drawings. Mark each panel with its casting date.

G. FINISHES
1. Exposed faces shall be free of joint marks, grain, and other obvious defects. Corners, including false joints, shall be uniform, straight, and sharp. Finish exposed-face surfaces of GFRC to match approveddesign reference sample and as follows:
   a. As-Cast-Surface Finish: Provide surfaces to match approved sample for acceptable surface, air voids, sand streaks, and honeycomb, with uniform color and texture.
   b. Textured-Surface Finish: Impart by form liners.
   c. Sand- or Abrasive-Blast Finish: Use abrasive grit, equipment, application techniques, and cleaning procedures to expose aggregate and surrounding matrix surfaces.

H. EXAMINATION
1. Examine structure and conditions for compliance with requirements for installation tolerances, bearing surfaces, and other conditions affecting performance of the Work.
2. Proceed with installation only after unsatisfactory conditions have been corrected.

08400 ALUMINUM ENTRANCES AND STOREFRONT

A. General: Provide aluminum-framed systems, including anchorage, capable of withstanding, without failure, the effects of the following:
1. Structural loads
2. Thermal movements
3. Movements of supporting structure indicated on drawings including, but not limited to, story drift and deflection from uniformly distributed and concentrated live loads.
4. Dimensional tolerances of building frame and other adjacent construction.
5. Failure includes the following:
   a. Deflection exceeding specified limits
   b. Thermal stresses transferred to building structure.
   c. Framing members transferring stresses, including those caused by thermal and structural movements, to glazing.
   d. Noise or vibration created by wind and thermal and structural movements.
   e. Loosening or weakening of fasteners, attachments, and other components.
   f. Sealant failure.
   g. Failure of operating units to function properly.

B. Structural Loads:
1. Wind loads: Provide glazed aluminum curtain wall system, including anchorage, capable of withstanding wind-load design pressures calculated according to requirements of authorities having jurisdiction or the American Society of Civil Engineers' ASCE, "Minimum Design Loads for Buildings and Other Structures," 6.42, "Analytical Procedure," whichever are more stringent. Wind design pressure of 146 mph. (see sheet S12 for additional wind pressure requirements)

C. Deflection of Framing Members:
1. Deflection normal to wall plane: Limited to 1/175 of clear span for spans up to 13 feet 6 inches (4.1 m) and to 1/240 of clear span plus ¼ inch (6.35 mm) for spans greater than 13 feet 6 inches (4.1 m) or an amount that restricts edge deflection of individual glazing lites to ¾ inch (19 mm), whichever is less.
2. Deflection parallel to glazing plane: Limited to amount not exceeding that which reduces glazing bite to less than 75 percent of design dimension and that which reduces edge clearance between framing members and glazing or other fixed components directly below to less than 1/8 inch (3.2 mm) and clearance between members and operable units directly below to less than 1/16 inch (1.5 mm).

D. Structural-Test Performance: Provide aluminum-framed systems tested according to ASTM E330 as follows:
1. When tested at positive and negative wind-load design pressures, systems do not evidence deflection exceeding specified limits.
2. When tested at 150 percent of positive and negative wind-load design pressures, systems, including anchorage, do not evidence material failures, structural distress, and permanent deformation of main framing members exceeding 0.2 percent of span.
3. Test durations: As required by design wind velocity but not less than 10 seconds.

E. State of Florida Product Approval: Product shall have a product approval number issued by the State of Florida Statue 553.842. Approved for use in HVHZ:
1. Design Basis (Storefront System): Florida Product Approval:FL#14218.9
2. Design Basis (Entrance System): Florida Product Approval: FL#16554.1

F. Thermal movements: Provide aluminum-framed systems that allow for thermal movements resulting from the following maximum change (range) in ambient and surface temperatures. Base engineering calculation on surface temperatures of materials due to both solar heat gain and nighttime-sky heat loss.
1. Temperature change (range): 120 deg f (67 deg c), ambient; 180 deg f (100 deg c), material surfaces.
2. Test performance: no buckling; stress on glass; sealant failure; excess stress on framing, anchors, and fasteners; or reduction of performance when tested according to aama 501.5.
   a. Test high exterior ambient-air temperature: That which produces an exterior metal-surface temperature of 180 deg F (82 deg C).
   b. Test Low Exterior Ambient-Air Temperature: 0 deg F (minus 18 deg C).
   c. Test Interior Ambient-Air Temperature: 75 deg F (24 deg C).

G. Air infiltration: provide aluminum-framed systems with maximum air leakage through fixed glazing and framing areas of 0.06 cfm/sq.ft. (0.03 L/s per sq. M) of fixed wall area when tested according to ASTM E 283 at a minimum static-air-pressure difference of 6.24 lbf/sq.ft. (300 pa.).

H. Water Penetration Under Static Pressure: Provide aluminum-framed systems that do not evidence water penetration through fixed glazing and framing areas when tested according to ASTM E 331 at a minimum static-air-pressure difference of 20 percent of positive wind-load design pressure, but not less than 6.24 lbf/sq.ft. (300 pa.).

I. Water penetration under dynamic pressure: provide aluminum-framed systems that do not evidence water leakage through fixed glazing and framing areas when tested according to aama 501.1 under dynamic pressure equal to 20 percent of positive wind-load design pressure, but not less than 6.24 lbf/sq.ft. (300 pa.).

K. Maximum Water Leakage: No uncontrolled water penetrating systems or appearing on systems normally exposed interior surfaces from sources other than condensation. Water controlled by flashing and gutters that is drained to exterior and cannot damage adjacent materials or finishes is not considered water leakage.

L. Condensation Resistance: Provide aluminum-framed systems with fixed glazing and framing areas having condensation-resistance factor (CRF) of not less than 53 then tested according to AAMA 1503.

M. Products: Basis-of-Design
1. Aluminum Storefront: Thermally Broken YKK 50 TU
2. Aluminum Entrance: YKK 35H

N. Framing Systems:
1. Framing Members: Manufacturer's standard extruded-aluminum framing members of thickness required and reinforced as required to support imposed loads.
2. Construction: Nonthermal.
3. Brackets and Reinforcements: Manufacturer's standard high-4.5strength aluminum with nonstaining, nonferrous shims for aligning system components.

O. Fasteners and Accessories: Manufacturer's standard corrosion-resistant, nonstaining, nonbleeding fasteners and accessories compatible with adjacent materials.
1. Where fasteners are subject to loosening or turning out from thermal and structural movements, wind loads, or vibration, use self-locking devices.
2. Reinforce members as required to receive fastener threads.

P. Concrete and masonry inserts: hot-dip galvanized cast-iron, malleable-iron, or steel inserts complying with astm a 123/a 123m or astm a 153/a 153m requirements.

Q. Flashing: manufacturer's standard corrosion-resistant, nonstaining, nonbleeding flashing compatible with adjacent materials. Form exposed flashing from sheet aluminum finished to match framing and of sufficient thickness to maintain a flat appearance without visible deflection.

R. Framing system gaskets and sealants: manufacturers standard recommended by manufacturer for joint type.

S. Glazing
1. Glazing: As specified in division 8 section "glazing".
2. Glazing Gaskets: Manufacturer's standard compression types, replaceable, molded or extruded, that maintain uniform pressure and watertight seal.
3. Spacers and setting blocks: manufacturer's standard elastomeric types.
4. Bond-Breaker Tape: Manufacturer's standard tfe-fluorocarbon or polyethylene material to which sealants will not develop adhesion.
5. Weatherseal sealant: astm c 920 for type s, grade ns, class 25, uses nt, g, a, and o; neutral-curing silicone formulation compatible with structural sealant and other system components with which it comes in contact; and recommended by structural- and weatherseal-sealant and aluminum-framed system manufacturers for this use.
   a. Color: Matching structural sealant

T. Doors: Manufacturer's standard glazed doors, for manual swing operation.
1. Door construction: 1-3/4-inch (44.5 mm) overall thickness, with minimum 0.125-inch (3.2 mm) thick, extruded-aluminum tubular rail and stile members. Mechanically fasten corners with reinforcing brackets that are deep penetration and fillet welded or that incorporate concealed tie rods.
2. Door design: wide stile, 5-inch (127 mm) nominal width.
   a. Accessible Doors: Smooth surfaced for width of door in area within 10 inches (255 mm) above floor or ground plane.
3. Glazing Stops and Gaskets: Beveled, snap-on, extruded-aluminum stops and preformed gaskets.
   a. Provide nonremovable glazing stops on outside of door.

(CONT.) 08400 ALUMINUM ENTRANCES AND STOREFRONT

U. Door Hardware: Provide heavy-duty units in sizes and types recommended by entrance system and hardware manufacturers for entrances and uses indicated.
1. Opening-Force Requirements:
   a. Egress Doors: Not more than 30 lbf (133 n) required to set door in motion and not more than 15 lbf (67 n) required to open door to minimum required width.
   b. Accessible Interior Doors: Not more than 5 lbf (222 n)
2. Named Manufacturer's Products: Product designation and hardware manufacturer are listed in the door hardware schedule to establish minimum requirements for design, grade, function, finish, size, and other distinctive qualities of each type of door hardware.
3. References to BHMA Standards: Provide products complying with standards referenced in this Article and with requirements for description, quality, type, and function listed in the Door Hardware Schedule.
4. Pivot Hinges:
   a. Standard: BHMA A156.4, Grade 1, pivots at each door leaf.
5. Locking Devices, General: Do not require use of key, tool, or special knowledge for operation.
   a. Opening-Force Requirements:
   b. Latches and Exit Devices: Not more than 15 lbf (67 N) required to release latch.
6. Mortise Auxiliary Locks: BHMA A156.5, Grade 1.
7. Manual Flush Bolts: BHMA A156.16, Grade 1.
8. Automatic and Self-Latching Flush Bolts: BHMA A156.3, Grade
9. Panic Exit Devices: Listed and labeled by a testing and inspecting agency acceptable to authorities having jurisdiction, for panic protection, based on testing according to UL 305.
10. Standard: BHMA A156.3, Grade 1.
11. Cylinders: As specified in Division 8 Section "Door Hardware."
12. Keying: Master key system. Permanently inscribe each key with a visual key control number and include notation "DO NOT DUPLICATE".

V. Strikes: Provide strike with black-plastic dust box for each latch or lock bolt; fabricated for aluminum framing.
W. Operating Trim: BHMA A156
X. Closers: With accessories required for a complete installation, sized as required by door size, exposure to weather, and anticipated frequency of use, and adjustable to meet field conditions and requirements for opening force.
Y. Door Stops: BHMA A156.16, Grade 1, floor or wall mounted, as appropriate for door location indicated, with integral rubber bumper.
Z. Weather Stripping: Manufacturer's standard replaceable components.
1. Compression Type: Made of ASTM D 2000, molded neoprene, or ASTM D 2287, molded PVC.
2. Sliding Type: AAMA 701, made of wool, polypropylene, or nylon woven pile with nylon-fabric or aluminum-strip backing.

AA. Weather Sweeps: Manufacturer's standard exterior-door bottom sweep with concealed fasteners on mounting strip.
BB. Silencers: BHMA A156.16, Grade 1.
CC. Thresholds: Raised thresholds beveled with a slope of not more than 1:2, with maximum height of ½ inch (13 mm).
1. Standard: BHMA A156.21.

DD. Finger Guards: Manufacturer's standard collapsible neoprene or PVC gasket anchored to frame hinge-jamb at center-pivoted doors.

08700 FINISH HARDWARE

A. Furnish labor and material to complete hardware work indicated, as specified herein, or as may be required by actual conditions at building.
B. Include all necessary screws, bolts, expansion shields, other devices, if necessary, as required for proper hardware application. The hardware supplier shall assume all responsibility for correct quantities.
C. All hardware shall meet the requirements of Federal, State and Local codes having jurisdiction over this project, notwithstanding any real or apparent conflict therewith in these specifications.
D. Fire-Rated Openings:
1. Provide hardware for fire-rated openings in compliance with A.I.A. (NBFU) pamphlet No. 80 and NFPA standards No. 101. This requirement takes precedence over other requirements for such hardware. Provide only hardware that has been tested and listed by ul for the types and sizes of doors required, and complies with the requirements of the door and door frame labels.
2. Where panic exit devices are required on fire-rated doors, provide supplementary marking on door UL label indicating fire door to be equipped with fire exit hardware and provide UL label on exit device indicating "fire exit hardware".

E. Fasteners:
1. Hardware as furnished shall conform to published templates generally prepared for machine screw installation.
2. Furnish each item complete with all screws required for installation. Typically, all exposed screws installation.
3. Insofar as practical, furnished concealed type fasteners for hardware units that have exposed screws shall be furnished with phillips flat head screws, finished to match adjacent hardware.
4. Door closers and exit devices to be installed with closed head through bolts (sex bolts).

F. The supplier to be a directly franchised distributor of the products to be furnished and have in their employ an AHC (Architectural Hardware Consultant). This person is to be available for consultation to the Architect, Owner and the Contractor at reasonable times during the course of work.
G. The finish hardware supplier shall prepare and submit to the Architect six (6) copies of a complete schedule identifying each door and each set number, following the numbering system and not creating any separate system himself. He shall submit the schedule for review, make corrections as directed and resubmit the corrected schedule for final approval. Approval of schedule will not relieve Contractor of the responsibility for furnishing all necessary hardware, including the responsibility for furnishing correct quantities.
H. No manufacturing orders shall be placed until detailed schedule has been submitted to the Architect and written approval received.
I. After hardware schedule has been approved, furnish templates required by manufacturing contractors for making proper provisions in their work for accurate fitting, finishing hardware setting. Furnish templates in ample time to facilitate progress of work.
J. Hardware supplier shall have an office and warehouse facilities to accommodate the materials used on this project. The supplier must be an authorized distributor of the products specified.
K. The hardware manufactures are to supply both a pre-installation class as well as a post-installation walk-thru. This is to insure proper installation and provide for any adjustments or replacements of hardware as required.
L. All numbers and symbols used herein have been taken from the current catalogues of the following manufacturers.

PRODUCT	SPECIFIED MANUFACTURER	ACCEPTABLE SUBSTITUTE
1. Hinges	Ives	Hager, Stanley
2. Locks & Latches	Schlage	Corbin, Russwin
3. Cylinders, Keys, Keying	Schlage	None (No Substitutes)
4. Exit Devices	Von Duprin	None (No Substitutes)
5. Door Closers	LCN	Norton
6. OH Stops/Holders	Glynn Johnson	Rixson
7. Wall Stops/Floor Stops, Flushbolts	Glynn Johnson	Rockwood, Ives
8. Threshold/Weather-strip	National Guard	Pemko, Reese
9. Silencers	Glynn Johnson	Rockwood, Ives

M. Exterior hinges to be stainless steel (32D), interior hinges to be satin chrome (26D). Door closers to be aluminum. Locks to be satin chrome (26D), exit devices to be satin chrome (26D). Overhead holders to be satin chrome (26D), flat goods to be satin chrome (26D) or stainless steel (32D) and the thresholds to be mill finish aluminum.
N. Locks and cylinders shall be Schlage 6-pin. Exterior cylinders to have Schlage primus level III. Bittings and keys shall be factory master keyed by Schlage lock in order to maintain the integrity of the existing grand master key system. Provide bitting list with 100% expansion. The permanent keys and bitting list shall be shipped directly from Schlage lock company to the Owners project representative. 10 extra key blanks are to be provided.
O. Locksets shall be extra heavy-duty cylindrical type, unless specified otherwise, in "ND" series, Rhodes Design as manufactured by Schlage. Standard cylinders, no interchangeable core cylinders.
P. All devices shall be Von Duprin 98 series in types and functions specified. All devices must be listed under "Panic Hardware" in accident equipment list of Underwriters Laboratories. All labeled doors with "fire exit hardware" must have labels attached and be in strict accordance with Underwriters Laboratories. Trim shall be 990NL active and 990DT inactive type at the exterior openings and 996l type at fire rated interior openings.
Q. Exit devices shall be tested to ANSI/BHMA A156.3 test requirements by a BHMA Certified Testing Laboratory, a written certification showing successful completion of a minimum of 1,000,000 cycles must be provided.
R. Surface strike shall be roller type and come complete with a plate underneath to prevent movement. And shall be provided with a dead-latching feature to prevent latchbolt tampering.

(CONT.) 08700 FINISH HARDWARE

S. Closers shall be LCN 4111 series having non-ferrous covers, forged steel arms separate valves for adjusting backcheck, closing and latching cycles and adjustable spring to provide up to 50% in spring power. Closers shall be furnished with parallel arm mounted on all doors opening into corridors or other public spaces and shall be mounted to permit 180 degrees door swing wherever wall conditions permit. Furnish with non-hold open arms unless otherwise indicated.
T. Door closer cylinders shall be of high strength cast iron construction to provide low wear operating capabilities of internal parts throughout the life of the installation. Door closers shall be tested ANSI/BHMA A156.4 test requirements by a BHMA Certified Testing Laboratory. A written certification showing successful completion of a minimum of 10,000,000 cycles must be provided.
U. Door closers shall utilize temperature stable fluid capable of withstanding temperature ranges of 120 degrees fahrenheit, without requiring seasonal adjustment of closer speed to properly close the door. Closers for fire-rated doors shall be provided with temperature stabilizing fluid that complies with the standards UBC 7-2 (1997) and UL 10C. Pressure relief valves (prv) are not acceptable.
V. Door closers shall incorporate tamper resistant non-critical screw valves of v-slot design to reduce possible clogging from particles within the closer. Closers shall have separate and independent screw valve adjustments for latch speed, general speed, and hydraulic backcheck. Backcheck shall be properly located so as to effectively slow the swing of the door at a minimum of 10 degrees in advance of the dead stop location to protect the door frame and hardware from damage.
W. Kick plates, mop plates, and armor plates, shall be .050 gauge with 32d finish. Kick plates to be 10" high, mop plates to be 4" high. All plates shall be two (2) inches less full width of door.
X. Doorstops shall be furnished for all doors to prevent damage to doors or hardware from striking adjacent walls or fixtures. Wall bumpers equal to Ives 6WS407 series are preferred, but where not practical furnish floor stops equal to Ives F5436 or F5438 series. Where conditions prohibit the use of either wall or floor type stops, furnish surface mounted overhead stops equal to Glynn Johnson, 450 series.
Y. The following schedule is furnished for whatever assistance it may afford the Contractor; do not consider it as entirely inclusive. Should any particular door or item be omitted in any scheduled hardware group, provide door or item with hardware same as required for similar purposes. Quantities listed are for each pair of doors or for each single door.

08800 GLAZING

A. Glass standards
1. FSDD-G-451D glass, float or plate, sheet, figured (flat for glazing, mirrors, and other uses).
2. FSDD-G-1403B (1) glass, plate (float), sheet, figured, and spandrel (heat-strengthened and fully tempered).
3. FSDD-M-00411B (1) mirrors, glass.
4. NFPA No. 80 standard for fire doors and windows.
5. Sealed insulating glass manufacturers association "sigma specifications for sealed insulating glass units".

B. Glazing Standards:
1. Flat Glass Marketing Association "Glazing Manual".
2. Sigma "Glazing Recommendations For Sealed Insulating Glass Units".

C. Interior Non-Rated Locations:
1. Clear tempered float glass (CTFG)
   a. 1/4" thick, uncoated, clear, colorless, tempered.
   b. Basis For Design: Viracon, clear

D. Exterior impact resistant and blast mitigation window and storefront locations:
1. 1-inch insulated glass:
   a. Glazing: outdoor lite 1/4" thick, uncoated + 1/2" air fill + 1/4" interior lite clear
   b. Exterior glazing performance requirements, Climate Zone 1A minimum requirements:
      1. Visible Transmission: .060
      2. U-Value (Winter/Summer), Fixed Fenestration: .050
      3. Solar Heat Gain Coef (SHGC): .025

   Basis for design: Viracon 1/4" clear with VS1-20 #2 + 1/2" air space + 1/4" clear
2. Impact resistant laminated glass high strength (IRLG)
   a. Outer layer - 1/4" thick, heat strengthened tinted float glass, blue tint. Inner layer - ½" thick, heatstrengthened float glass clear.
   b. Basis for design: Viracon, (match Retail "F" glazing).
3. Impact Resistant Laminated Glass - Canopy panels sloped applications:
   9/16" thick tinted laminated unit:
   a. 1/4" tinted tempered
   b. .060" clear PVB interlayer
   c. 1/4" clear tempered.

E. Interior Rated Partition Locations:
1. Fire rated glass (fr) 20 minutes (@ vision panels for interior doors in 60 minute partitions)
   a. 3/16" thick, clear, tempered fire rated impact safety. Each piece permanently labeled with manfacturer logo, UL logo, and fire rating.
   b. Basis for design: TPG Fireglass 20.
2. Fire rated glass (FR) 45 minutes (@ transom and sidelite panels above/adjacent doors in 60 minute partitions (if applicable).
   a. 3/16" thick, clear ceramic fire-rated impact safety rated. Each piece permanently labeled with manfacturer logo, UL logo, and fire rating.
   b. Basis for design: TPG Firelite Plus.
3. Fire rated glass (FR) 60 minutes
   a. 5/16" thick, clear ceramic fire-rated impact safety rated. Each piece permanently labeled with manfacturer logo, UL logo, and fire rating.
   b. Basis for design: TGP Firelite Plus.

F. Provide other materials, not specifically described but required for a complete and proper installation, as selected by the Contractor subject to the specified acceptance by the Architect

09111 NON-LOAD BEARING STEEL FRAMING

A. FRAMING SYSTEMS
1. Recycled Content of Steel Products: Postconsumer recycled content plus one-half of preconsumer recycled content not less than 25 percent.
2. Framing Members, General: Comply with ASTM C 754 for conditions indicated.
3. Studs and Runners:
   1. Steel Studs and Runners:
      a. Minimum Base-Metal Thickness: As indicated on Drawings.
      b. Depth: As indicated on Drawings
4. Slip-Type Head Joints: Where indicated, provide¾ one of⅛ the following:
   1. Deflection Track: Steel sheet top runner manufactured to prevent cracking of finishes applied to interior partition framing resulting from deflection of structure above; in thickness not less than indicated for studs and in width to accommodate depth of studs.
5. Cold-Rolled Channel Bridging: Steel, 0.053-inch minimum base-metal thickness, with minimum 1/2-inch- wide flanges.
   1. Depth: As indicated on Drawings
   2. Clip Angle: Not less than 1-1/2 by 1-1/2 inches 0.068-inch- thick galvanized steel.
6. Hat-Shaped, Rigid Furring Channels: ASTM C 645.
   1. Minimum Base-Metal Thickness: As indicated on Drawings.
   2. Depth: As indicated on Drawings
7. Resilient Furring Channels: 1/2-inch- deep, steel sheet members designed to reduce sound transmission.
8. Cold-Rolled Furring Channels: 0.053-inch (uncoated-steel thickness, with minimum 1/2-inch- wide flanges.
   1. Depth: As indicated on Drawings
   2. Furring Brackets: Adjustable, corrugated-edge type of steel sheet with minimum uncoated-steel thickness of 0.033 inch
   3. Tie Wire: ASTM A 641/A 641M, Class 1 zinc coating, soft temper, 0.062-inch-diameter wire, or double strand of 0.048-inchdiameter wire.
   4. Z-Shaped Furring: With slotted or nonslotted web, face flange of 1-1/4 inches, wall attachment flange of 7/8 inch, minimum uncoated-metal thickness of 0.018 inch, and depth required to fit insulation thickness indicated.

B. SUSPENSION SYSTEMS
1. Tie Wire: ASTM A 641/A 641M, Class 1 zinc coating, soft temper, 0.062-inchdiameter wire, or double strand of 0.048-inch- diameter wire.
2. Hanger Attachments to Concrete:
   1. Anchors: Fabricated from corrosion-resistant materials with holes or loops for attaching wire hangers and capable of sustaining, without failure.
   2. Powder-Actuated Fasteners: Suitable for application indicated, fabricated from corrosion-resistant materials with clips or other devices for attaching hangers of type indicated, and capable of sustaining, without failure.
3. Wire Hangers: ASTM A 641/A 641M, Class 1 zinc coating, soft temper, 0.16 inch
4. Flat Hangers: Steel sheet, size indicated on Drawings
5. Carrying Channels: Cold-rolled, commercial-steel sheet with a base-metal thickness of 0.053 inch and minimum 1/2-inchwide flanges.
6. Grid Suspension System for Gypsum Board Ceilings: ASTM C 645, direct-hung system composed of main beams and cross-furring members that interlock.

C. AUXILIARY MATERIALS
1. General: Provide auxiliary materials that comply with referenced installation standards.
   1. Fasteners for Metal Framing: Of type, material, size, corrosion resistance, holding power, and other properties required to fasten steel members to substrates.
2. Isolation Strip at Exterior Walls: Provide one of the following:
   1. Asphalt-Saturated Organic Felt: ASTM D 226, Type I (No. 15 asphalt felt), nonperforated.
   2. Foam Gasket: Adhesive-backed, closed-cell vinyl foam strips that allow fastener penetration without foam displacement, 1/8 inch thick, in width to suit steel stud size.

09220 PORTLAND CEMENT PLASTER

A. METAL LATH
1. Expanded-Metal Lath: ASTM C 847 with ASTM A 653/A 653M, G60, hot-dip galvanized zinc coating.
2. Recycled Content: Provide steel products with average recycled content such that postconsumer recycled content plus one-half of preconsumer recycled content is not lessthan (25) twenty-five percent.
3. Diamond-Mesh Lath: Flat, 3.4 lb/sq. yd.
4. Paper Backing: FS UU-B-790, Type I, Grade B, Style la vapor-retardant paper.

B. MECHANICAL FASTENERS
1. Appropriate non-corroding fasteners, depending on the type framing or substrate:
   a. Steel Framing-minimum #8 Type S or S-12 wafer head fully threaded corrosion resistant screws with minimum 3/8 inch (10 mm) penetration into studs.
   b. Concrete or Masonry-minimum # 8 wafer head fully threaded corrosion resistant screws for masonry with minimum 1 inch (25 mm) penetration into substrate.
2. Tie Wire-18 gauge galvanized and annealed low-carbon steel in compliance with ASTM A 641 with Class 1 coating.

F. ACCESSORIES
1. General: Comply with ASTM C 1063 and coordinate depth of trim and accessories with thicknesses and number of plaster coats required.
2. Plastic Accessories: Fabricated from high-impact PVC.
3. length required to suit applications indicated.
   a. Square-edge stylet use unless otherwise indicated.
   b. Bull-nose style, radius 5/8 inch minimunt use at locations indicated on Drawings.
4. Control Joints: One-piece-type, folded pair of unperforated screeds in M-shaped configuration with perforated flanges and removable protective tape on plaster face of control joint.
5. Expansion Joints: Two-piece type, formed to produce slip-joint and square-edged 1/4"-inch wide reveal with perforated concealed flanges.
6. Drip Screed: Extruded aluminum alloy 6063 T5, with chemical conversion coating, finished paint to match existing.
   a. Basis-of-Design: Fry Reglet Weep & Drip Screed
7. Reveal trim: Extruded aluminum alloy 6063 T5, with chemical conversion coating, finished paint to match existing.
   a. Basis-of-Design: Fry Reglet 1-1/2" chanel screed reveal

G. MISCELLANEOUS MATERIALS
1. Water for Mixing: Potable and free of substances capable of affecting plaster set or of damaging plaster, lath, or accessories.
2. Fiber for Base Coat: Alkaline-resistant glass or polypropylene fibers, 1/2 inch long, free of contaminants, manufactured for use in portland cement plaster.
3. Bonding Compound: ASTM C 932.
4. Steel Drill Screws: For metal-to-metal fastening, ASTM C 1002 or ASTM C 954, as required by thickness of metal being fastened; with pan head that is suitable for application; in lengths required to achieve penetration through joined materials of no fewer than three exposed threads.
5. Fasteners for Attaching Metal Lath to Substrates: Complying with ASTM C 1063.
6. Wire: ASTM A 641/A 641M, Class 1 zinc coating, soft temper, not less than 0.0475-inch diameter, unless otherwise indicated.

H. PLASTER MATERIALS
1. Portland Cement: ASTM C 150, Type I.
   1. Color for Finish Coats: match adjacent.
2. Masonry Cement: ASTM C 91, Type N.
   1. Color for Finish Coats: match adjacent.
3. Plastic Cement: ASTM C 1328.
4. Colorants for Job-Mixed Finish Coats: Colorfast mineral pigments that produce finish plaster color to match Architect's sample.
5. Lime: ASTM C 206, Type S; or ASTM C 207, Type S.
6. Sand Aggregate: ASTM C 897.
   a. Color for Job-Mixed Finish Coats: In color matching Architect's sample.
7. Perlite Aggregate: ASTM C 35.
8. Exposed Aggregates for Finish Coats: For marblecrete finish, clean, sound, crushed marble matching color and size gradation of Architect's sample.
9. Ready-Mixed Finish-Coat Plaster: Mill-mixed portland cement, aggregates, coloring agents, and proprietary ingredients.
10. Products: Subject to compliance with requirements, provide one of the following:
    a. Bonsal American, an Oldcastle Company; Marblesil Stucco Mix.
    b. California Stucco Products Corp.; Conventional Portland Cement Stucco.
    c. El Rey Stucco Company, Inc., a brand of ParexLaHabra, Inc.; Premium Stucco Finish.
    d. Florida Stucco; Florida Stucco.
    e. LaHabra, a brand of ParexLaHabra, Inc.; Exterior Stucco Color Coat.
    f. Omega Products International, Inc.; ColorTek Exterior Stucco.
    g. QUIKCRETE; QUIKCRETE Finish Coat Stucco, No. 1201.
    h. Shamrock Stucco LLC; Exterior Stucco.
    i. SonoWall, BASF Wall Systems, Inc.; Thoro Stucco.
    j. USG Corporation; Oriental Exterior Finish Stucco.
11. Color: As selected by Architect from manufacturer's full range.

I. PLASTER MIXES
1. General: Comply with ASTM C 926 for applications indicated.
   a. Fiber Content: Add fiber to base-coat mixes after ingredients have mixed at least two minutes. Comply with fiber manufacturer's written instructions for fiber quantities in mixes, but do not exceed 1 lb of fiber/cu. yd. of cementitious materials.
   b. Base-Coat Mixes for Use over Metal Lath: Scratch and brown coats for three-coat plasterwork as follows:
2. Portland Cement Mixes:
   a. Scratch Coat: For cementitious material, mix 1 part portland cement and 3/4 to 1-1/2 parts lime. Use 2-1/2 to 4 parts aggregate per part of cementitious material. (1) lb. chopped fiberglass per bag of portland cement.
   c. Brown Coat: For cementitious material, mix 1 part portland cement and 3/4 to 1-1/2 parts lime. Use 3 to 5 parts aggregate per part of cementitious material, but not less than volume of aggregate used in scratch coat. (1) lb. chopped fiberglass per bag of portland cement.
3. Base-Coat Mixes: Single base coats for two-coat plasterwork as follows:
   a. Portland Cement Mix: For cementitious material, mix 1 part portland cement and 0 to 3/4 part lime. Use 2-1/2 to 4 parts aggregate per part of cementitious material.
4. Primer: Acrylic based tinted, sanded primer for fully cured stucco surfaces.
5. Finish Coat: integrally colored, factory blended, flexible acrylic textured/smooth finish with graded marble aggregate.

EXECUTION

A. EXAMINATION
1. Examine areas and substrates, with Installer present, and including welded hollow-metal frames, cast-in anchors, and structural framing, for compliance with requirements and other conditions affecting performance of the Work.
2. Proceed with installation only after unsatisfactory conditions have been corrected.

B. PREPARATION
1. Protect adjacent work from soiling, spattering, moisture deterioration, and other harmful effects caused by plastering.
2. Prepare solid substrates for plaster that are smooth or that do not have the suction capability required to bond with plaster according to ASTM C 926.

C. INSTALLATION, GENERAL
1. Fire-Resistance-Rated Assemblies: Install components according to requirements for design designations from listing organization and publication indicated on Drawings.
2. Sound Attenuation Blankets: Where required, install blankets before installing lath unless blankets are readily installed after lath has been installed on one side.
3. Acoustical Sealant: Where required, seal joints between edges of plasterwork and abutting construction with acoustical sealant.

D. INSTALLING METAL LATH
1. Expanded-Metal Lath: Install according to ASTM C 1063.
   1. Partition Framing and Vertical Furring: Install flat diamond-mesh lath.
   2. Flat-Ceiling and Horizontal Framing: Install flat diamond-mesh lath.
   3. Curved-Ceiling Framing: Install flat diamond-mesh lath.
   4. On Solid Surfaces, Not Otherwise Furred: Install self-furring, diamond-mesh lath.

E. INSTALLING ACCESSORIES
1. Install according to ASTM C 1063 and at locations indicated on Drawings.
2. Reinforcement for External Corners:
   1. Install lath-type, external-corner reinforcement at exterior locations.
   2. Install cornerbead at interior and exterior locations.
3. Control Joints: Install control joints at locations indicated on Drawings.

F. PLASTER APPLICATION
1. General: Comply with ASTM C 926.
   1. Do not deviate more than plus or minus 1/4 inch in 10 feet from a true plane in finished plaster surfaces, as measured by a 10-foot straightedge placed on surface.
   2. Finish plaster flush with metal frames and other built-in metal items or accessories that act as a plaster ground unless otherwise indicated. Where casing bead does not terminate plaster at metal frame, cut base coat free from metal frame before plaster sets and groove finish coat at junctures with metal.
   3. Provide plaster surfaces that are ready to receive field-applied finishes indicated.
2. Bonding Compound: Apply on unit masonry and concrete plaster bases.
3. Three coat work on masonry.

	Vertical surfaces
Scratch coat	1/4"
Brown coat	1/4"
Finish coat	1/8"
Total	5/8"

G. Three coat work on metal lath.

	Horizontal surfaces	Vertical surfaces
# Scratch coat	1/4"	3/8"
Brown coat	1/4"	3/8"
Finish coat	1/4"	1/8"
Total	3/4"	7/8"

H. Relief from Stress
1. Provide incised control joints 1/4" depth in brown coat immediately after the initial set, in location indicated on drawings.
2. Where dissimilar materials abut and surfaces are to receive a continuous application of plaster, provide a continuous 8" wide strip of fiberglass mesh set in scratch coat, lapping 4" to either side of joint. EXCEPTION: Where cast in place concrete has been poured on or against masonry, the joints do not require reinforcing.

I. Curing
1. ASTM C 926 - 98 Section 8, Curing and time between coats - Section 8.1, 8.2 Appendix X 1.4.2.
2. Scratch coat: Moist cure a minimum of 48 hours unless next coat is applied between 4 and 12 hours of installing scratch coat. Maintain finished work in a continuously moist condition indicated by surface having uniform A "dark gray" color.
   1. Moist curing shall be executed using a nursery fogging nozzle, applying a light mist to the stucco. Do not saturate the stucco. Surface shall be free of visible water prior to application of the next coat of stucco.
3. Brown coat: Moist cure a minimum of 48 hours. Maintain finished work in a continuously moist condition indicated by surface having uniform dark gray color.
4. Finish coat: Moist cure a minimum of 72 hours after applying finish coat. Maintain finished work in a continuously moist condition indicated by surface having a uniform dark gray color.
5. Final cure: Allow a minimum of 21 days before the application of sealer paint.

G. Control Joints
1. Provide wherever abutting dissimilar structural element or wall or ceiling.
2. Change in construction substrate.
3. Locate at 30' on center in all walls and ceilings or as shown on drawings.
4. Align with building construction joints.
5. Extend control joints to above at all door frames.
6. Extend control joints below ends of all partial height borrowed lights.
7. Coordinate firestopping (Section 07210) at rated walls.
8. Provide diagonal strip lath around all penetrations.
9. Substrate structure and lath shall not be continuous at any control joint.

H. Plaster Finish Coats: Apply to provide float finish to match Architect's sample.

I. Acrylic-Based Finish Coatings: Apply coating system, including primers, finish coats, and sealing topcoats, according to manufacturer's written instructions.

J. Concealed Exterior Plasterwork: Where plaster application will be used as a base for adhered finishes, omit finish coat.

G. PLASTER REPAIRS
1. Repair or replace work to eliminate cracks, dents, blisters, buckles, crazing and check cracking, dry outs, efflorescence, sweat outs, and similar defects and where bond to substrate has failed.

H. PROTECTION
1. Remove temporary protection and enclosure of other work. Promptly remove plaster from door frames, windows, and other surfaces not indicated to be plastered. Repair floors, walls, and other surfaces stained, marred, or otherwise damaged during plastering.

THIS DOCUMENT CONTAINS COPYRIGHTED MATERIAL AND TRADE SECRET INFORMATION BELONGING EXCLUSIVELY TO WILLIAMSON DACAR ASSOCIATES, INC. ANY UNAUTHORIZED USE, DISCLOSURE, DISSEMINATION OR DUPLICATION OF ANY OF THE INFORMATION CONTAINED HEREIN MAY RESULT IN LIABILITY UNDER APPLICABLE LAWS.

WILLIAMSON DACAR ASSOCIATES, INCORPORATED
Architecture Planning Engineering
ARCHITECTURE / ENGINEERING / PLANNING
15500 LIGHTWAVE DRIVE SUITE 106
CLEARWATER, FL. 33760
PH (727) 725-0951 www.williamsondacar.com
Architect: AA 0002541
Engineering: EB 0006884

WELLINGTON GREEN PARCEL "F"
PHASE II RETAIL "H" MODIFICATION
PETITION NO. 16-18 (2016-08 ASA 53)
2545 SOUTH STATE ROAD 7
WELLINGTON, FLORIDA 33414

Revisions of Drawings

No.	Date	Revisions
-	-	-
-	-	-
-	-	-
-	-	-
-	-	-
-	-	-
-	-	-
-	-	-
-	-	-
-	-	-

Issues of Drawings

No.	Date	Issues
1	06.15.16	100% CD – PERMIT SET
-	-	-
-	-	-
-	-	-
-	-	-
-	-	-
-	-	-
-	-	-
-	-	-

Phase: CD
Checked: TW
Drawn: JA
Drawing Tiltle

SPECIFICATION SHEET

WDA Proj. No.: 1526-01
Owner Proj. No.:
Scale: AS NOTED
Sheet No.
T.4
No. of Sheets.: – –

SPECIFICATIONS

09500 ACOUSTICAL CEILINGS

A. Acoustical Panel Standard: Provide manufacturer's standard panels of configuration indicated that comply with ASTM E1264 classifications as designated by types, patterns, acoustical ratings, and light reflectances, unless otherwise indicated.
 1. Mounting Method for Measuring Noise Reduction Coefficient: Type E-400; plenum mounting in which face of test specimen is 15-3/4 inches away from test surface per ASTM E795.
 2. Test Method for Ceiling Attenuation Class (CAC): Where acoustical panel ceilings are specified to have a CAC, provide units identical to those tested per ASTM E1414 by a qualified testing agency.

B. Acoustical Panel Colors and Patterns: Match appearance characteristics indicated for each product type.

C. Provide manufacturer's written standard warranty for 10 years from date of installation against sagging, warping or shrinking of acoustical ceiling panels under conditions up to 90 degrees F temperature and 90 percent relative humidity.

D. Panel Characteristics: Comply with requirements indicated in the Acoustical Panel Ceiling Schedule at the end of Part 3, including those referencing ASTM E1264 classifications.

E. Metal Suspension System Standard: Provide manufacturer's standard direct-hung metal suspension systems of types, structural classifications, and finishes indicated that comply with applicable ASTM C635 requirements.

F. Metal Suspension System Characteristics: Comply with requirements indicated in the Acoustical Panel Ceiling Schedule .

G. Finishes and Colors, General: Comply with NAAMM's "Metal Finishes Manual for Architectural and Metal Products" for recommendations for applying and designating finishes. Provide manufacturer's standard factory-applied finish for type of system indicated.

H. Attachment Devices: Size for five times design load indicated in ASTM C635, Table 1, Direct Hung, unless otherwise indicated.

I. Wire Hangers, Braces, and Ties: Provide wires complying with the following requirements:
 1. Zinc-Coated Carbon-Steel Wire: ASTM A641, Class 1 zinc coating, soft temper.
 2. Size: Select wire diameter so its stress at three times hanger design load (ASTM C635, Table 1, Direct Hung) will be less than yield stress of wire, but provide not less than 0.106-inch-diameter wire.

J. Hanger Rods and Flat Hangers: Mild steel, zinc coated or protected with rust-inhibitive paint.

K. Angle Hangers: Angles with legs not less than 7/8 inch wide; formed with 0.04-inch-thick, galvanized steel sheet complying with ASTM A653, G90 coating designation; with bolted connections and 5/16-inch-diameter bolts.

L. Grid - Non-Rated Assemblies
 1. Armstrong Prelude
 2. 15/16" exposed grid.
 3. 1-1/2" main runners and cross tees.
 4. Used at non-rated assemblies only.
 5. Grid to be White.

M. Hanger Wire
 1. Galvanized, soft annealed steel wire, 12 gauge minimum.

N. Retention Clips
 1. Armstrong No. 414.

O. Panel Schedule: AT-1
 1. Armstrong World Industries, Inc. "Fine Fissured" 1833
 2. Color: White.
 3. Light Reflectance Coefficient: 0.85.
 4. Noise Reduction Coefficient: 0.55.
 5. Ceiling Attenuation Class: 35.
 6. Edge Detail: Angled Tegular
 7. Thickness: 5/8 inch.
 8. Size: 24 by 24 inches.

09600 RESILIENT FLOORING AND ACCESSORIES

A. Source Limitations: Obtain each type, color, and pattern of tile and accessories specified from one source with resources to provide products of consistent quality in appearance and physical properties without delaying the work. Provide primers, adhesives, sealants, leveling compounds and similar materials that are compatible to and in conformance with the manufacturer's recommendations regarding tile, accessories and substrates.

B. Fire-Test-Response Characteristics: Provide products with the following fire-test-response characteristics as determined by testing identical products per the ASTM test method indicated below by Underwriters Laboratories, Inc. (UL) or another testing and inspecting agency acceptable to authorities having jurisdiction.
 1. Critical Radiant Flux: 0.45 W/sq. cm or greater when tested per ASTM E648.
 2. Smoke Density: Maximum specific optical density of 450 or less when tested per ASTM E662.

C. Vinyl Composition Floor Tile: Products complying with ASTM F1066 and with requirements specified as follows:
 1. Class: Class 2, through-pattern tile.
 2. Thickness: 1/8 inch.
 3. Size: 12 by 12 inches.
 4. Wearing Surface: Smooth.
 5. Product: Armstrong, #51877 EARTH GREEN
 6. Color : #51877 EARTH GREEN or match existing.
 7. Pattern: As indicated by Architect in Construction Documents.

D. Rubber Wall Base: Products complying with FS SS-W-40a, Type II and with requirements specified as follows:
 1. Style: Cove with top-set toe.
 2. Minimum Thickness: 1/8 inch.
 3. Height: 4 inches.
 4. Lengths: Coils in lengths standard with manufacturer but not less than 96 feet.
 5. Corners and End Stops: Premolded outside corners. Kerfing straight base for use as an outside corner is unacceptable.
 6. Surface: Smooth.
 7. Product, Color and Pattern: JOHNSONITE #72 HARBOUR

E. Rubber Accessory Molding: Provide the following accessories, selected from manufacturer's standard types, profile, sizes, thickness, style, color and pattern.
 1. Carpet to Resilient Tile Transition (min 2" width)
 2. Reducer strip from resilient Tile to concrete flooring (min 2" width)

F. Concrete Slab Primer: Nonstaining type as recommended by flooring manufacturer.

G. Trowelable Leveling and Patching Compounds: Latex-modified, Portland-cement-based formulation provided or approved by flooring manufacturer for applications indicated.

09680 CARPET

A. Carpet shall be from a single run or lot to assure color uniformity.

B. Test Standards
 1. Smoke Developed: NFPA 258.
 2. Flame Spread: ASTM E-84.
 3. Static Rating: AATCC 134-197.
 4. Critical Flux: ASTM E-648.

C. Provide carpeting with at least the following minimum attributes:
 1. Description: Level loop pile with Lifetime antimicrobial
 2. Gauge: 1/10 min.
 3. Stitch Rate: 10 min. per inch
 4. Pile Height: .09-.187 inch
 5. Fiber: Advanced generation continuous filament nylon w/static control 3 or 4 ply.
 6. Dye Method: Yarn dyed.
 7. Yard Weight: 22 oz. min.
 8. Primary Back: Moisture barrier with or without cushion in 12' roll goods or carpet squares
 9. Pile Density: Minimum 6000 oz/yd3
 10. Fire Rating: Class I
 11. Product, Color & Pattern - To match existing installed carpet tiles.

D. Carpet Accessory Materials
 1. Carpet Edge Guard: Manufacturer's standard type of molded vinyl or metal carpet edge guard stripping.
 2. Adhesive for Carpet: Provide adhesive as recommended by the carpet manufacturer. Provide adhesive which complies with flame spread rating required for the carpet installation.
 3. Miscellaneous Materials: Provide the types of seaming tapes, thread, nails, adhesive and other accessory items recommended by the carpet manufacturer and installer for the conditions of installation and use, without failure during the life of the carpet.

E. Product: MATCH EXISTING

09900 PAINT

A. Provide block fillers, primers, finish coat materials, and related materials that are compatible with one another and the substrates indicated under conditions of service and application, as demonstrated by the manufacturer based on testing and field experience.

B. Provide the manufacturer's best-quality trade sale paint material of the various coating types specified. paint material containers not displaying manufacturer's product identification will not be acceptable.

C. Match colors indicated by reference to the manufacturer's standard color designations.

D. Examine substrates and conditions under which painting will be performed for compliance with paint application requirements. Surfaces receiving paint shall be thoroughly dry before paint is applied.

E. Clean and prepare surfaces to be painted according to the manufacturer's instructions for each particular substrate condition and as specified.

F. Interior: Provide the following paint systems for the various substrates, as indicated.

 1. Concrete and Masonry: Semigloss Acrylic Latex Finish: Two finish coats over masonry block filler with total dry film thickness not less than 8.5 mils.
 2. Gypsum Board: Semi-gloss Acrylic Latex finish: Two finish coats over primer with total dry film thickness not less than 6.0 mils.
 3. Galvanized (zinc coated) Ferrous Metal: Semi-Gloss Silicone Alkyd Enamel Finish: Two finish coats over galvanized metal primer with total dry mil thickness not less than 7.0 mils.
 4. Ferrous Metal: Semi-Gloss Silicone Alkyd Enamel Finish: Two finish coats over rust inhibitive primer with total dry mil thickness not less than 7.0 mils.
 5. Wood: Semi-Gloss Alkyd Enamel Finish: Two coats over primer with total dry mil thickness not less than 5.0 mils.

G. Color: Match existing general paint and accent paint.

07240 EXTERIOR INSULATION FINISH SYSTEM (EIFS)

CLASSIC PB WALL SYSTEM

A. Wind Load
 1. Maximum deflection not to exceed L/240 of span under positive or negative design loads.
 2. Design for wind load in conformance with local code requirements.

B. Substrate Systems
 1. Acceptable substrates are PermaBase®Cement Board and other cement-boards conforming with ASTM C1325 (Type A-exterior) , poured concrete/unit masonry, Fiberock® Aqua-Tough™ Sheathing, e²XP™ sheathing (ASTM C1177), GlasRoc® sheathing (ASTM C1177), Securock™ glass-mat sheathing (ASTM C1177), DensGlass® exterior sheathing (ASTM C1177), gypsum sheathing (ASTM C79/C1396), Exposure 1 or exterior plywood (Grade CD or better), or Exposure 1 OSB.
 2. Painted and otherwise coated surfaces of brick, unit masonry, stucco and concrete shall be inspected and prepared as approved by BASF Wall Systems before application. Other substrates shall be approved by the system's manufacturer in writing prior to the application. The applicator shall verify that the proposed substrate is acceptable prior to the Senerflex Classic PB Wall System installation.
 3. The substrate systems shall be engineered with regard to structural performance by others.

C. Moisture Control
 1. Prevent the accumulation of water behind the EIF system, either by condensation or leakage through the wall construction, in the design and detailing of the wall assembly.
  a. Provide flashing to direct water to the exterior where it is likely to penetrate components in the wall assembly, including, above window and door heads, beneath window and door sills, at roof/wall intersections, decks, abutments of lower walls with higher walls, above projecting features, and at the base of the wall and anywhere else required by local code.
  b. Air Leakage Prevention: provide continuity of air barrier system at foundation, roof, windows, doors and other penetrations through the system with connecting and compatible air barrier components to minimize condensation and leakage caused by air movement.
  c. Vapor Diffusion and Condensation: perform a dew point analysis of the wall assembly to determine the potential for accumulation of moisture in the wall assembly as a result of water vapor diffusion and condensation. Adjust insulation thickness and/or other wall assembly components accordingly to minimize the risk of condensation. Avoid the use of vapor retarders on the interior side of the wall in warm, humid climates.

D. Impact Resistance
 1. Provide Ultra-High impact resistance to a minimum height of 6' - 0" (1.8m) above finished grade at all areas accessible to pedestrian traffic and other areas exposed to abnormal stress or potential impact. Indicate the areas with impact resistance requirements other than "Standard" on contract drawings.

E. Color Selection
 1. The use of dark colors must be considered in relation to wall surface temperature as a function of local climate conditions. Select Finish Coat color with a light reflectance value (LRV) of 20% or higher. The use of dark colors (LRV less than 20%) is not recommended with EIF Systems that incorporate expanded polystyrene (EPS). EPS has a sustained service temperature limitation of approximately 71°C (160°F).

F. System Joints
 1. Minimum ¾" (19mm) expansion joints in the system are required at building expansion joints, at prefabricated panel joints, floor lines of wood frame construction, where substrates change and where structural movement is anticipated. It is the sole responsibility of the project design team, including the architect, engineer, etc., to ultimately determine specific expansion joint placement, width and design. Detail specific locations in construction drawings.
 2. Minimum ½" (13mm) wide sealant joints are required at all penetrations through the Senerflex Classic PB Design (windows, doors, etc.)
 3. Specify compatible closed cell backer rod and acceptable sealant that has been evaluated in accordance with ASTM C 1382, "Test Method for Determining Tensile Adhesion Properties of Sealants When Used in Exterior Insulation and Finish System (EIFS) Joints," and that meets minimum 50% elongation after conditioning.
 4. The system must be properly terminated (back-wrapped a min. of 2", properly sealed, flashed) at all penetrations, lighting fixtures, electrical outlets, hose bibs, dryer vents, etc.

G. Trim, Projecting Architectural Features
 1. Minimum slope for all projections shall be 1:2 (27º) with a maximum length of 30.5 cm (12") ¾e.g. 15 cm in 30.5cm (6" in 12")⅛, unless other manufacturer-approved detailing is shown on the construction documents. Increase slope for northern climates to prevent accumulation of ice/snow on the surface.
 2. Senergy Wall Systems were designed and tested to be applied to vertical surfaces. As the slope of the wall system application decreases, the chance for premature deterioration of any wall system increases.
 3. Low sloping EIFS conditions are subject to more extreme heat. Low sloped areas are known to produce an increase in wall surface temperature. This design can lead to accelerated weathering of the low sloped surface.

H. Coordination with other trades
 1. Evaluate adjacent materials such as windows, doors, etc. for conformance to manufacturer's details. Adjacent trades shall provide scaled shop drawings for review.
 2. Air Seals at any joints/gaps between adjoining components (penetrations, etc.) are of primary importance to maintain continuity of an air barrier system and must be considered by the design professional in the overall wall assembly design. Install air seals between the primary Air/Water Resistive barrier and other wall components (penetrations, etc.) in order to maintain continuity of an air barrier system.
 3. Provide site grading such that PB Design terminates a minimum of 8" (203mm) above finished grade or as required by code.
 4. Install copings and sealant immediately after installation of the Senerflex Classic PB Design

I. MANUFACTURERS
Basis-of-Design Senerflex® Classic PB Design (Class PB System) manufactured by BASF Wall Systems.

J. MATERIALS

 1. Sheathing primer: black tinted, 100% acrylic-based sheathing primer for wood based sheathing substrates manufactured by BASF Wall Systems⅛.
 2. Adhesives/Base CoatsNC-II Base: 100% acrylic polymer-based, non-cementitious base coat.
 3. Portland cement: Conform to ASTM C150, Type I, II, or I/II, grey or white± fresh and free of lumps.
 4. Water: Clean and potable without foreign matter.
 5. Insulation EPS insulation board: Expanded polystyrene± ASTM C578, Type I± Flame spread less than 25, smoke developed less than 450 per ASTM E84, UL 723± minimum density 15.22 kg/m3 (0.95 lb/ft3± K=6.09/mm (0.24/inch)± 19 mm (3/4") thickness minimum as indicated on drawings or meeting the following:
  a. Air-dried (aged) six weeks, or equivalent, prior to installation.
  b. Edges: Square within 0.8 mm per meter (1/32" per foot).
  c. Thickness: Tolerance of plus or minus 1.6 mm (1/16").
  d. Size: 0.6 m x 1.22 m (2' x 4').
  e. Length and width: Tolerance of plus or minus 1.6 mm (1/16").⅛

- OR -
 6. QR polyisocyanurate insulation board: Quik-R by Dow± or Stucco-Shield II by Atlas Roofing Corporation. Nominal density 32 kg/m3 (2 lbs/ft3)± 25, 38, or 50 mm (1", 1.5", or 2") thickness as indicated on Drawings± meeting the following:
  a. Size: 1.22 m x 2.44 m, 1.22 m x 2.74 m (4' x 8', 4' x 9'), or other size as provided by insulation board manufacturer.
  b. Edges: square within 4 mm
  c. Thickness: tolerance of less than 1" thick).
  d. Length: tolerance of plus or minus 1/4"
  e. Width: tolerance of plus or minus 1/16"
  f.

K. Reinforcing Mesh: Balanced, open weave glass fiber reinforcing mesh± twisted multi-end strands treated.

L. ASAP: 100% acrylic-based coating.

M. COLOR COAT: 100% acrylic-based coating.

N. TINTED PRIMER: 100% acrylic-based primer± color to closely match the building stucco finish.

O. Finish Coat:
1. 100% acrylic resin finish± air cured, compatible with Base Coat Finish color factory-mixed color as selected by Architect. Finish texture: FINE

THIS DOCUMENT CONTAINS COPYRIGHTED MATERIAL AND TRADE SECRET INFORMATION BELONGING EXCLUSIVELY TO WILLIAMSON DACAR ASSOCIATES, INC.
ANY UNAUTHORIZED USE, DISCLOSURE, DISSEMINATION OR DUPLICATION OF ANY OF THE INFORMATION CONTAINED HEREIN MAY RESULT IN LIABILITY UNDER APPLICABLE LAWS.

WILLIAMSON DACAR ASSOCIATES© INCORPORATED
Architecture Planning Engineering
ARCHITECTURE / ENGINEERING / PLANNING
15500 LIGHTWAVE DRIVE SUITE 106
CLEARWATER, FL. 33760
PH (727) 725-0951 www.williamsondacar.com

Architect: AA 0002541
Engineering: EB 0006884

WELLINGTON GREEN PARCEL "F"
PHASE II RETAIL "H" MODIFICATION
PETITION NO. 16-18 (2016-08 ASA 53)

2545 SOUTH STATE ROAD 7
WELLINGTON, FLORIDA 33414

Revisions of Drawings

No.	Date	Revisions
–	–	–
–	–	–
–	–	–
–	–	–
–	–	–
–	–	–
–	–	–
–	–	–

Issues of Drawings

No.	Date	Issues
1	06.15.16	100% CD OWNER – PERMIT SET
–	–	–
–	–	–
–	–	–
–	–	–
–	–	–
–	–	–

Phase: CD
Checked: TW
Drawn: JA

Drawing Tiltle

SPECIFICATION SHEET

WDA Proj. No.: 1526–01
Owner Proj. No.:
Scale: AS NOTED

Sheet No.

T.5

No. of Sheets.: – –

THIS DOCUMENT CONTAINS COPYRIGHTED MATERIAL AND TRADE SECRET INFORMATION BELONGING EXCLUSIVELY TO WILLIAMSON DACAR ASSOCIATES, INC.
ANY UNAUTHORIZED USE, DISCLOSURE, DISSEMINATION OR DUPLICATION OF ANY OF THE INFORMATION CONTAINED HEREIN MAY RESULT IN LIABILITY UNDER APPLICABLE LAWS.

ELECTRICAL DRAWING NOTES

1. ALL WORK PERFORMED SHALL BE DONE BY A LICENSED ELECTRICAL CONTRACTOR AND IN A FIRST CLASS WORKMANLIKE MANNER. SAID CONTRACTOR SHALL MEET ALL REQUIREMENTS SET FORTH BY ANY LOCAL ORDINANCE AND/OR GOVERNING AUTHORITIES.
2. ENTIRE INSTALLATION SHALL BE IN ACCORDANCE WITH THE FLORIDA BUILDING CODE (2014 5TH EDITION), NATIONAL ELECTRIC CODE (2011), NFPA 72 (2010), FFPC (2010), AND ANY AND ALL OTHER ORDINANCES HAVING JURISDICTION.
3. IT SHALL BE THE RESPONSIBILITY OF THE ELECTRICAL CONTRACTOR TO PROVIDE ALL LABOR, MATERIALS, AND SUPERVISION NECESSARY TO ACCOMPLISH THE WORK SHOWN AND/OR NOTED ON THE DRAWINGS AND SPECIFICATIONS.
4. ALL REQUIRED INSURANCE SHALL BE PROVIDED FOR PROTECTION AGAINST PUBLIC LIABILITY AND PROPERTY DAMAGE FOR THE DURATION OF THE WORK.
5. ELECTRICAL CONTRACTOR SHALL VISIT THE JOB SITE PRIOR TO BID AND VERIFY ALL CONDITIONS, LOCATIONS, DIMENSIONS AND COUNTS AS SHOWN AND/OR NOTED ON THE DRAWINGS. THIS SHALL INCLUDE ANY AND ALL FABRICATIONS REQUIRED PRIOR TO INSTALLATION.

6 IT SHALL BE THE RESPONSIBILITY OF THE ELECTRICAL CONTRACTOR FOR THE ADVANCED ORDERING OF LONG LEAD ITEMS SO AS NOT TO INTERFERE WITH THE PRODUCTION OF OTHER TRADES RESULTING IN ANY DOWN OR LAG TIME.

7. CONTRACTOR SHALL GUARANTEE ALL MATERIALS AND WORKMANSHIP FREE FROM DEFECTS FOR A PERIOD OF NOT LESS THAN (1) YEAR FROM DATE OF ACCEPTANCE, UNLESS INDICATED OR SPECIFIED OTHERWISE.
8. CORRECTION OF ANY DEFECTS SHALL BE COMPLETED WITHOUT ADDITIONAL CHARGE AND SHALL INCLUDE REPLACEMENT OR REPAIR OF ANY OTHER PHASE OF THE INSTALLATION WHICH MAY HAVE BEEN DAMAGED THEREBY.
9. THE ELECTRICAL CONTRACTOR SHALL BE RESPONSIBLE TO REPAIR TO ORIGINAL CONDITIONS ANY AND ALL DAMAGES TO BUILDING SURFACES, EQUIPMENT AND FURNISHINGS CAUSED DURING PERFORMANCE OF WORK.
10. ELECTRICAL CONTRACTOR SHALL NOT SCALE DRAWINGS. CONTRACTOR SHALL REFER TO ARCHITECTURAL PLANS AND ELEVATIONS FOR EXACT LOCATIONS OF ALL EQUIPMENT UNLESS NOTED OTHERWISE.
11. ALL ELECTRICAL EQUIPMENT, DEVICES, WIRE, ETC., SHALL BE LISTED FOR THE INTENDED USE, WITH UNDERWRITER'S LABORATORIES, INC. (UL) WHERE STANDARDS HAVE BEEN ESTABLISHED BY UL. AS A MINIMUM, ALL EQUIPMENT SHALL MEET APPLICABLE STANDARDS FOR THE TYPE OF EQUIPMENT AND INTENDED USE OF THE FOLLOWING:

    A. AMERICAN NATIONAL STANDARDS INSTITUTE (ANSI).
    B. ILLUMINATING ENGINEERS SOCIETY (IES).
    C. AMERICAN SOCIETY FOR TESTING AND MATERIALS (ASTM).
    D. NATIONAL ELECTRICAL MANUFACTURER'S ASSOCIATION (NEMA).

    NOTE:
    THESE STANDARDS ARE SUBORDINATE TO CODES AND STANDARDS SET BY UL.

12. IT IS NOT THE INTENT OF THESE PLANS AND/OR SPECIFICATIONS TO SHOW EVERY DETAIL OF CONSTRUCTION. THE ELECTRICAL CONTRACTOR SHALL BE EXPECTED TO PROVIDE ALL ITEMS AND EQUIPMENT NECESSARY FOR A COMPLETE AND FULLY FUNCTIONAL ELECTRICAL SYSTEM.
13. ALL CONDUIT RUNS ARE SHOWN DIAGRAMMATICALLY. EXACT ROUTING SHALL BE DETERMINED IN THE FIELD, UNLESS OTHERWISE NOTED. THE ELECTRICAL CONTRACTOR SHALL PROVIDE AND INSTALL THE PROPER NUMBER OF CONDUCTORS IN ALL RACEWAYS AS REQUIRED TO ACCOMPLISH THE PROPER FUNCTIONING OF THE DEVICE OR EQUIPMENT AS SHOWN.
14. THE ELECTRICAL CONTRACTOR SHALL KEEP ALL AREAS IN WHICH WORK IS BEING PER-FORMED, FREE FROM DEBRIS AT ALL TIMES AND SAID AREAS SHALL BE LEFT BROOM CLEAN AT THE END OF EACH WORKING DAY.
15. CONTRACTOR SHALL PAY FOR ALL PERMITS, FEES, INSPECTIONS, AND TESTING.
16. ARCHITECTURAL AND/OR ENGINEERING EXPENSES THAT ARE INCURRED DUE TO REVISIONS OR SUBSTITUTIONS REQUESTED BY THE CONTRACTOR SHALL BE PAID FOR BY THAT CONTRACTOR.
17. COORDINATE ALL ELECTRICAL SITE WORK WITH GENERAL CONTRACTOR PRIOR TO INSTALLATION.
18. ALL CONDUCTORS SHALL BE IN CONDUITS. ALL CONDUITS SHALL BE INTERMEDIATE (IMC) OR RIGID GALVANIZED STEEL (RGS) EXCEPT THAT: (a) POLYVINYL CHLORIDE (PVC) CONDUITS MAY BE USED IN CONCRETE SLABS AND UNDERGROUND PROVIDED ELBOWS AND RISERS ARE RGS: (b) ELECTRICAL METALLIC TUBING (EMT) MAY BE USED IN OR ON WALLS OR CEILING WHERE NOT SUBJECT TO MECHANICAL DAMAGE, DAMP CONDITIONS OR CORROSIVE CONDITIONS; (c) LIQUID-TIGHT FLEXIBLE CONDUIT WHERE REQUIRED; (d) FLEXIBLE METALLIC CONDUIT WHERE REQUIRED IN DRY LOCATIONS; (e) THE USE OF AC OR MC CABLES SHALL BE PROHIBITED. ALL CONDUITS IN HAZARDOUS AREAS (PER NEC) SHALL MEET THE REQUIREMENTS OF NEC CHAPTER 5.
19. FOR UNDERGROUND ELECTRICAL CONDUITS, PROVIDE PULL BOXES, SUCH THAT NO SINGLE CONDUIT RUN HAS BENDS IN EXCESS OF 360. PULL BOXES SHALL BE SUITABLE AND APPROVED FOR THE INTENDED USE. WHERE CONDUITS PASS UNDERNEATH PAVED AREAS THEY SHALL BE RGS. WHERE UNDERGROUND CONDUITS ARE NOT EXPOSED TO MECHANICAL DAMAGE OR ARE NOT UNDER PAVED AREAS, THEY MAY BE SCHEDULE 40 PVC, BUT ALL CONDUIT RISERS SHALL BE RGS. RGS CONDUITS SHALL EXTEND A MINIMUM OF 18" BELOW GRADE.
20. APPLY BITUMASTIC COATING TO ALL METALLIC CONDUITS IN SLABS OR UNDERGROUND.
21. ALL CONDUCTORS SHALL BE COPPER U.O.N., TYPE THHN OR THWN INSULATION, RATED 75°C WET/DRY EXCEPT WHERE OTHERWISE REQUIRED BY U.L. OR CODES UNLESS OTHERWISE NOTED. MINIMUM WIRE SIZE SHALL BE #12 AWG EXCLUDING CONTROL WIRING.
22. WIRE WAYS SHALL BE SIZED AS REQUIRED, PER NEC, UNLESS OTHERWISE NOTED.
23. ALL ELECTRICAL EQUIPMENT SHALL BE RAINTIGHT WHERE EXPOSED TO THE WEATHER. ALL FLEX CONDUITS CONNECTED TO SUCH EQUIPMENT SHALL BE LIQUID-TIGHT.
24. CIRCUIT BREAKERS SHALL BE BOLT-ON U.O.I., INVERSE TIME-TYPE (THERMAL-MAGNETIC). TWO AND THREE-POLE CIRCUIT BREAKERS SHALL HAVE COMMON TRIP. ALL PANELBOARDS SHALL HAVE COPPER BUS.
25. WHERE CORE DRILLING OF FLOOR/WALLS IS REQUIRED, CONTRACTOR SHALL SEAL OPENINGS WATERTIGHT AFTER UTILITIES HAVE BEEN INSTALLED. LOCATION OF CORED HOLES SHALL BE COORDINATED WITH LOCATION OF EQUIPMENT IN A MANNER TO BE CLEAN AND FUNCTIONAL. THE CONTRACTOR SHALL INSTALL ONLY ONE CONDUIT PER HOLE AND SEAL THE OPENING AROUND THE CONDUIT AS SPECIFIED.
26. PROVIDE FIRE RETARDANT U.L. APPROVED SEALANT ON ALL PENETRATIONS OF FIRE RATED PARTITIONS, WALLS AND STRUCTURAL SLABS. IT SHALL BE THE RESPON-SIBILITY OF THE ELECTRICAL CONTRACTOR TO VERIFY, PRIOR TO SUBMITTING BID, LOCATIONS OF ALL SUCH FIRE RATED PARTITIONS, WALLS, AND STRUCTURAL SLABS.
27. BALLASTS SHALL HAVE MIN. POWER FACTOR OF 0.90. BALLASTS FOR METAL HALIDE AND HIGH PRESSURE SODIUM FIXTURES SHALL BE CONSTANT WATTAGE TYPE WITH 5% LAMP WATTS FOR 10% NOMINAL LINE VOLTAGE VARIATION.
28. THE EQUIPMENT GROUNDING TERMINAL BARS OF THE NORMAL AND EMERGENCY ELECTRICAL SYSTEM PANELBOARDS SERVING THE SAME BUILDING SHALL BE BONDED TOGETHER WITH AN INSULATED, CONTINUOUS, COPPER CONDUCTOR NOT SMALLER THAN NUMBER 6.
29. PROVIDE LAMPS WITH FIXTURES, SEE LUMINAIRE SCHEDULE FOR LAMP TYPE.
30. ALL CONNECTIONS TO GROUND RODS & BUILDING STEEL SHALL BE MADE WITH UL APPROVED WELDED CONNECTIONS, UNLESS OTHERWISE NOTED.
31. PROVIDE A FUSE HOLDER AND FUSE IN THE PRIMARY SIDE OF EACH UNGROUNDED CONDUCTOR FOR EACH BALLAST (BUSSMAN HEB AND FNQ OR EQUAL), AT THE HAND HOLE OF EACH EXTERIOR POLE MOUNTED LIGHTING FIXTURE OR J-BOX FOR WALL OR GROUND MOUNTED EXTERIOR FIXTURES.
32. PROVIDE TEMPORARY ELECTRICAL SERVICE FOR USE BY ALL TRADES DURING CON-STRUCTION AND REMOVE SAME AT COMPLETION OF PROJECT,
33. THE ELECTRICAL CONTRACTOR SHALL FURNISH A COMPLETE SET OF AS-BUILT DRAWINGS, SHOWING ALL CHANGES AND DEVIATIONS TO THE ARCHITECT/ENGINEER PRIOR TO COMPLETION OF THE PROJECT.
34. PREPARE AND AFFIX A TYPEWRITTEN DIRECTORY TO THE INSIDE COVER OF EACH PANELBOARD INDICATING LOADS SERVED BY EACH CIRCUIT.

ELECTRICAL SYMBOLS LEGEND

NOT ALL SYMBOLS SHOWN ARE FOR THIS PROJECT

- RECESSED DOWNLIGHT
- WALL SCONCE
- EMERGENCY BATTERY WALL MOUNTED LIGHT FIXTURE
- OR — CEILING OR WALL MOUNTED EXIT SIGNS. CHEVRONS & SHADED AREA DETERMINES THE DIRECTION
- EMERGENCY WALLPACK & EXIT SIGN COMBO (LITHONIA #LHQM-LED-R)
- $ — CONTROL SWITCH
  DM = DIMMER
  3 = 3-WAY
  LV = LOW VOLTAGE
- POLE MOUNTED WITH ARM SINGLE LUMINAIRE

ELECTRICAL SYMBOLS LEGEND: POWER

- DISCONNECT
- J — WALL MOUNTED CAPPED OUTLET BOX OR JUNCTION BOX
- DUPLEX RECEPTACLE

ELECTRICAL SYMBOLS LEGEND: OTHER

- H-24 — LABEL OR PANEL-CIRCUIT
- XX — LABEL OR KEYED NOTE
- EXISTING TO REMAIN LINETYPE
- EXISTING TO BE REMOVED (DEMO) LINETYPE
- EXISTING TO BE RELOCATED LINETYPE
- NEW LINETYPE

ELECTRICAL SYMBOLS LEGEND: ABBREVIATIONS

A	ABOVE COUNTER
AG	ABOVE COUNTER & GFI
A.F.F.	ABOVE FINISHED FLOOR
B.F.C.	BELOW FINISHED CEILING
B.F.G.	BELOW FINISHED GRADE
CL	CENTER LINE
ECB	ENCLOSED CIRCUIT BREAKER
EM/E	EMERGENCY
ER	EXISTING DEVICE TO REMAIN
ERL	EXISTING DEVICE RELOCATED
G	GROUND FAULT INTERRUPTER
IG	ISOLATED GROUND
M.H.	MOUNTING HEIGHT
N	NEW DEVICE
NL	NIGHT LIGHT
T.C.	TERMINAL CABINET
T.S.	TIME SWITCH
U.O.N.	UNLESS OTHERWISE NOTED
WP.	WEATHER PROOF
XFMR.	TRANSFORMER

WILLIAMSON DACAR ASSOCIATES© INCORPORATED
Architecture Planning Engineering
ARCHITECTURE / ENGINEERING / PLANNING
15500 LIGHTWAVE DRIVE SUITE 106
CLEARWATER, FL. 33760
PH (727) 725-0951 www.williamsondacar.com

Architect: AA 0002541
Engineering: EB 0006884

project CAINE ENGINEERING INCORPORATED
RESPONSIVE ENGINEERING
MECHANICAL ELECTRICAL PLUMBING/FIRE PROTECTION
1948 EAST SUNRISE BLVD, SUITE #1
FORT LAUDERDALE, FLORIDA 33304
P. 954.767.8886 F. 954.767.9934
www.projectcaine.com
#P05000009451, CA#28087

ROBERT B. CAINE LICENSE No. 37637 STATE OF FLORIDA PROFESSIONAL ENGINEER

WELLINGTON GREEN PARCEL "F"
PHASE II RETAIL "H" MODIFICATION

2545 SOUTH STATE ROAD 7
WELLINGTON, FLORIDA 33414

Revisions of Drawings

No.	Date	Revisions

Issues of Drawings

No.	Date	Issues
1	06.15.16	100% CD – PERMIT SET

Phase:
Checked:
Drawn: BDL

Drawing Tiltle

ELEC. LEGEND & GENERAL NOTES

WDA Proj. No.: 1526-01
Owner Proj. No.:
Scale: AS NOTED

Sheet No.
E-0.0

No. of Sheets.:

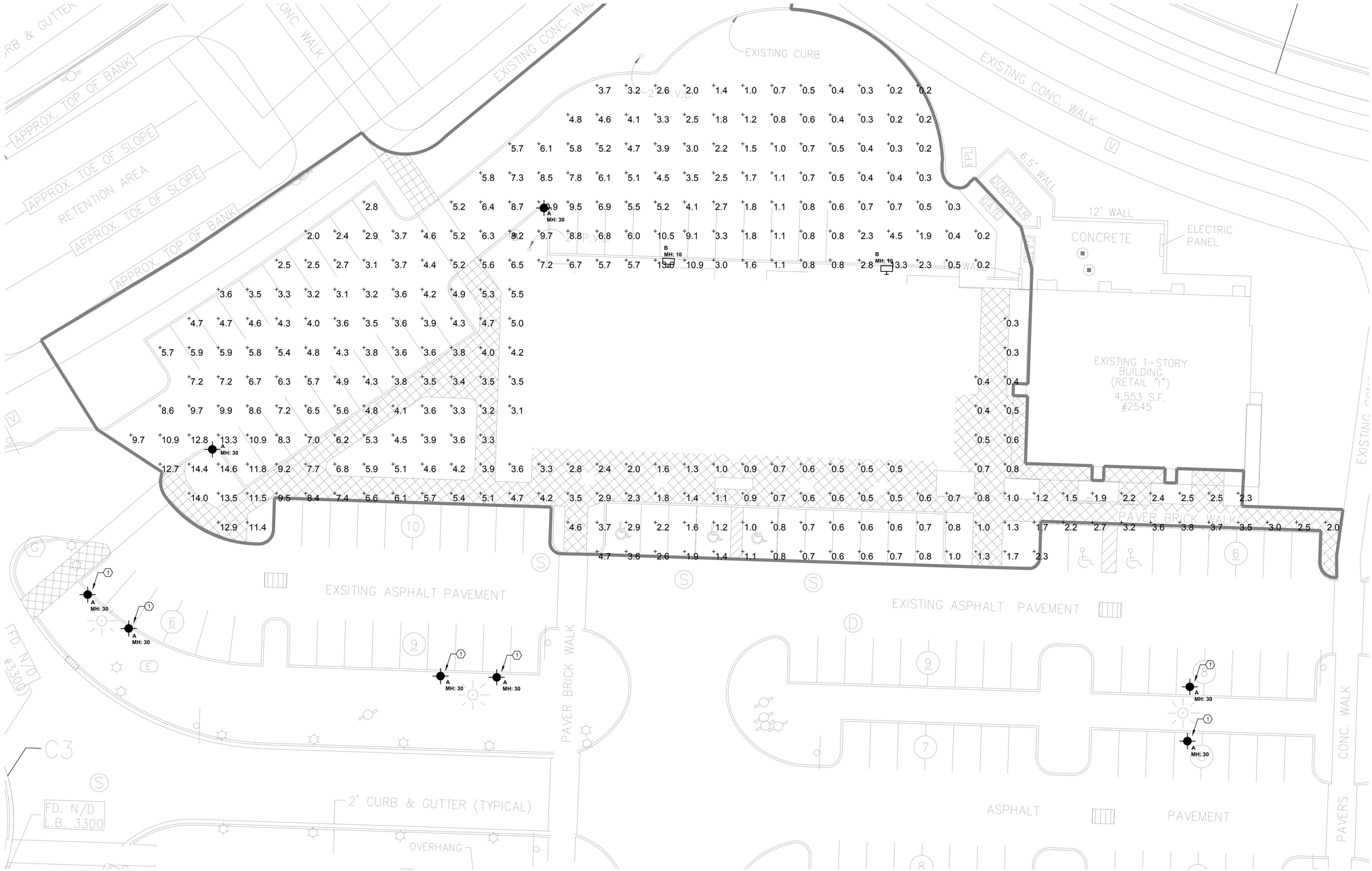

1 SITE PLAN – PHOTOMETRICS
E-1.1 SCALE: 1/8" = 1'-0"

LUMINARY SCHEDULE

REMODELING FOR WELLINGTON GREEN SHOPPING CENTER

☐ TYPE	DESCRIPTION	VOLTS	BALLAST TYPE	LAMPS OR TUBES NO.	LAMPS OR TUBES WATTS	LAMPS OR TUBES TYPE	TOTAL WATTS	MFTR	CATALOG NBR	REMARKS
A	Site Pole Light	120	Magnetic	1	1000	MH	1000	WLS Lighting	WLS-RV-L-5-1000-MHR-FG	
B	Exterior Cutoff Wallpack	120	Magnetic	1	100	MH	100	Lithonia	TWAC-100M-120-DBL-LPI	

NOTES:

1. Provide all lighting fixtures as specified. Should there be any discrepancies between the schedule, drawings, etc., contractor shall notify architect/design engineer in writing prior to purchase & rough-in.

ELECTRICAL KEYED NOTES: (#)

1. EXISTING LIGHT FIXTURE TO REMAIN.

PHOTOMETRIC DATA				
AVG.	MAX.	MIN.	MAX:MIN	AVG:MIN
3.8	14.6	0.2	73.0:1	19.0:1

THIS DOCUMENT CONTAINS COPYRIGHTED MATERIAL AND TRADE SECRET INFORMATION BELONGING EXCLUSIVELY TO WILLIAMSON DACAR ASSOCIATES, INC. ANY UNAUTHORIZED USE, DISCLOSURE, DISSEMINATION OR DUPLICATION OF ANY OF THE INFORMATION CONTAINED HEREIN MAY RESULT IN LIABILITY UNDER APPLICABLE LAWS.

WILLIAMSON DACAR ASSOCIATES
Architecture / Engineering / Planning
ARCHITECTURE / ENGINEERING / PLANNING
15500 ROOSEVELT BLVD, SUITE 106
CLEARWATER, FL 33760
PH (727) 725-0951 www.williamsondacar.com
Architect: AA 0002541
Engineering: EB 0006884

project CAINE ENGINEERING INCORPORATED
RESPONSIVE ENGINEERING
MECHANICAL ELECTRICAL PLUMBING/FIRE PROTECTION
1845 EASTWOOD BLVD SUITE 204
DUNEDIN, FLORIDA 34698
P 954.767.8889 F 954.767.8924
www.projectcaine.com
#PE0000860; EA#3691

ROBERT B. CAINE LICENSE No. 37637 STATE OF FLORIDA PROFESSIONAL ENGINEER

WELLINGTON GREEN PARCEL "F"
PHASE II RETAIL "H" MODIFICATION

2545 SOUTH STATE ROAD 7
WELLINGTON, FLORIDA 33444

Revisions of Drawings

No.	Date	Revisions

Issues of Drawings

No.	Date	Issues
1	06.15.16	100% CD – PERMIT SET

Phase:
Checked:
Drawn: BDL

Drawing Title: SITE PLAN - PHOTOMETRICS

WDA Proj. No.: 1526-01
Owner Proj. No.:
Scale: AS NOTED

Sheet No.: E-1.1

No. of Sheets.:

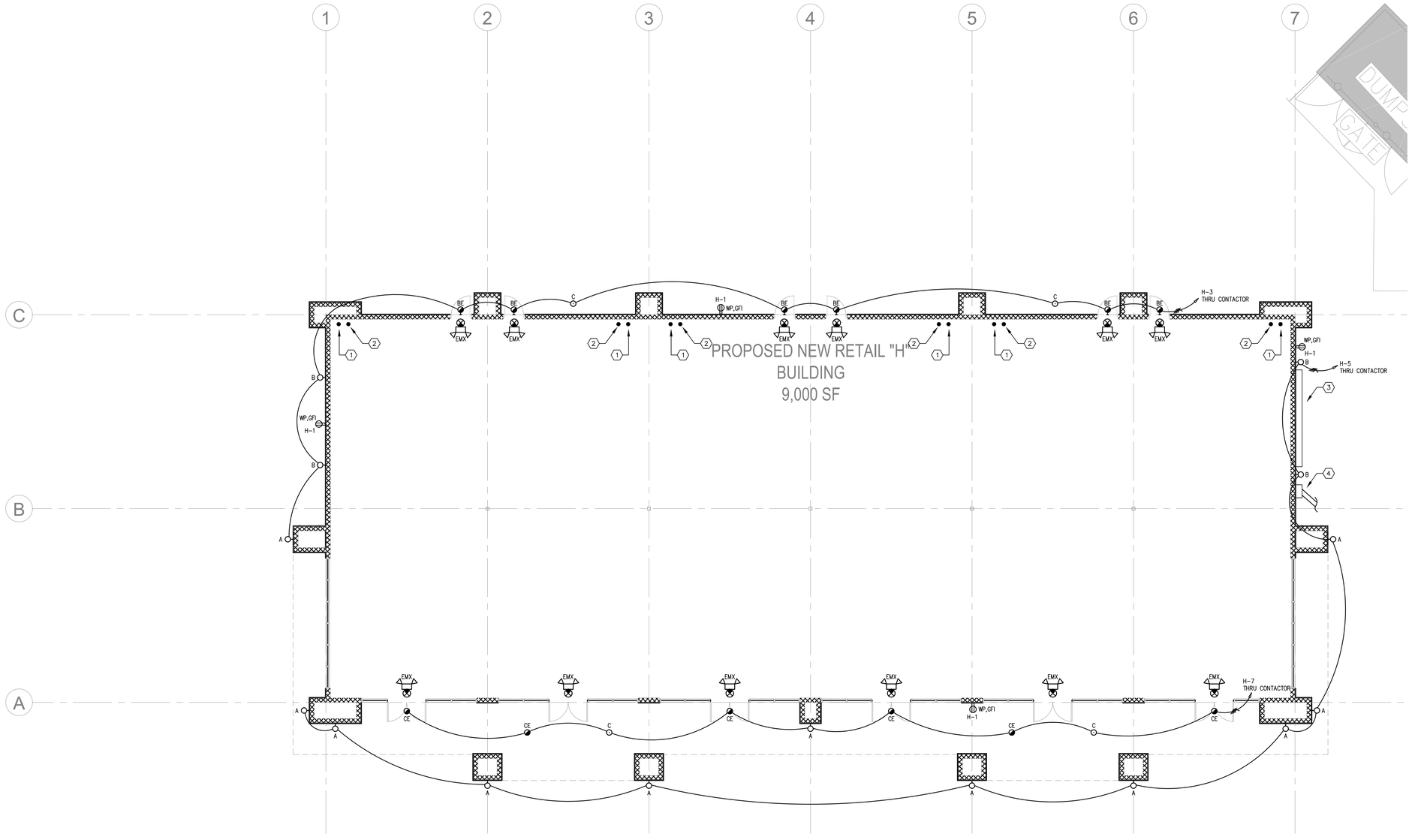

1 E-2.1 BUILDING PLAN – ELECTRICAL
SCALE: 1/8" = 1'-0"

SCOPE NOTE:

1. ADDITIONAL POWER AND LIGHTING DEVICES SHALL BE PROVIDED AT TIME OF INDIVIDUAL TENANT FIT-UP.

ELECTRICAL KEYED NOTES: (#)

1. STUB 1-2" C. BACK TO ELECTRICAL SERVICE LOCATION FOR FUTURE TENANT PANEL. REFER TO RISER DIAGRAM FOR MORE DETAILS.
2. STUB 1-1" C. BACK TO TELEPHONE CABINET LOCATION FOR FUTURE TENANT TELEPHONE SERVICE. PROVIDE PULL WIRE.
3. NEW ELECTRICAL SERVICE GUTTER. REFER TO RISER DIAGRAM SHEET E6.1 FOR MORE DETAILS.
4. 24"X24"X12" NEMA 3R TELEPHONE CABINET. RUN 2-4" C. TO RIGHT-OF-WAY FOR FUTURE TENANT TELEPHONE SERVICE. PROVIDE PULL WIRE.

THIS DOCUMENT CONTAINS COPYRIGHTED MATERIAL AND TRADE SECRET INFORMATION BELONGING EXCLUSIVELY TO WILLIAMSON DACAR ASSOCIATES, INC. ANY UNAUTHORIZED USE, DISCLOSURE, DISSEMINATION OR DUPLICATION OF ANY OF THE INFORMATION CONTAINED HEREIN MAY RESULT IN LIABILITY UNDER APPLICABLE LAWS.

WILLIAMSON DACAR ASSOCIATES
Architecture | Planning | Interiors | Engineering | Landscape Architecture
ARCHITECTURE / ENGINEERING / PLANNING
INTERIOR DESIGN / LANDSCAPE ARCHITECTURE
1550 CLEARWATER, FL 33760
PH (727) 725-0951 www.williamsondacar.com

Architect: AA 0002541
Engineering: EB 0006884

project CAINE ENGINEERING INCORPORATED
RESPONSIVE ENGINEERING
MECHANICAL ELECTRICAL PLUMBING/FIRE PROTECTION
1545 LAKEPOINTE DRIVE, SUITE 108
LEWISVILLE, TEXAS 75057
P 214.767.8888 F 214.767.8924
www.projectcaine.com
#FB0000680; GA#3680

ROBERT B. CAINE LICENSE No. 37637 STATE OF FLORIDA PROFESSIONAL ENGINEER

WELLINGTON GREEN PARCEL "F"
PHASE II RETAIL "H" MODIFICATION

2545 SOUTH STATE ROAD 7
WELLINGTON, FLORIDA 33444

Revisions of Drawings

No.	Date	Revisions

Issues of Drawings

No.	Date	Issues
1	06.15.16	100% CD – PERMIT SET

Phase:
Checked:
Drawn: BDL

Drawing Title

BUILDING PLAN - ELECTRICAL

WDA Proj No.: 1526-01
Owner Proj. No.:
Scale: AS NOTED

Sheet No.

E-2.1

No. of Sheets.:

NEW PANEL H

MAINS: 60 MCB **VOLTAGE:** 208/120 **WIRE:** 4 **MOUNTING:** SURFACE
BUS: 100 A **PHASE:** 3 **AIC:** 10 kA **ENCLOSURE:** NEMA 3R

CKT #	TRIP POLE	LOAD TYPE	AWG/ COND.	DESCRIPTION	CONNECTED LOAD KVA kVA	PH A	PH B	PH C	kVA	DESCRIPTION	AWG/ COND.	LOAD TYPE	TRIP POLE	CKT #
1	20/1	B	#12-3/4"C	EXTERIOR RECS	0.8	0.8				SPARE			20/1	2
3	20/1	A	#12-3/4"C	REAR EXTERIOR LTS	0.3		0.3			SPARE			20/1	4
5	20/1	A	#12-3/4"C	FRONT EXTERIOR LTS	0.3			0.3		SPARE			20/1	6
7	20/1	A	#12-3/4"C	CANOPY LTS	0.5	0.5				SPACE				8
9				SPACE						SPACE				10
11				SPACE						SPACE				12
13				SPACE						SPACE				14
15				SPACE						SPACE				16
17				SPACE						SPACE				18
19				SPACE						SPACE				20

Panel Load Analysis

Load Type	Description	Conn. KVA	Demand KVA	2008 NEC Reference
A	Lighting	1.1	1.3	Per NEC Table 220.12
B	Receptacles	0.8	0.8	Per NEC Table 220.44
C	Air-Conditioning			Per NEC Article 440.6
D	Heating			Per NEC Article 220.60
E	Kitchen Equipment			Per NEC Table 220.56
F	Motor			Per NEC Table 430.22-26
G	Other			

Phase A Connected Load	1.3	TOTAL CONNECTED LOAD:	**1.9** KVA
Phase B Connected Load	0.3		
Phase C Connected Load	0.3	TOTAL DEMAND LOAD:	**2.1** KVA

LOCATION: REFER TO PLANS
LOAD AMPS: 5.9

LUMINARY SCHEDULE

REMODELING FOR WELLINGTON GREEN SHOPPING CENTER

TYPE	DESCRIPTION	VOLTS	BALLAST TYPE	LAMPS OR TUBES NO.	WATTS	TYPE	TOTAL WATTS	MFTR	CATALOG NBR	REMARKS
A	Wall Sconce	120	LED	1	26	LED	26	Bega	33-592	
B	Wall Sconce	120	LED	1	13	LED	13	Bega	33-581	
BE	Wall Sconce	120	LED	1	13	LED	13	Bega	33-581	With Emergency Battery
C	Recessed Downlight	120	Verify	1	50	Verify	50 Max	Verify	Specified By Owner	
CE	Recessed Downlight	120	Verify	1	50	Verify	50 Max	Verify	Specified By Owner	With Emergency Battery
EMX	Exit/Emergency Combo	120/12	LED	1	5	LED	5	Lithonia	LHQM-LED-R	

NOTES:

1. Provide all lighting fixtures as specified. Should there be any discrepancies between the schedule, drawings, etc., contractor shall notify architect/design engineer in writing prior to purchase & rough-in.

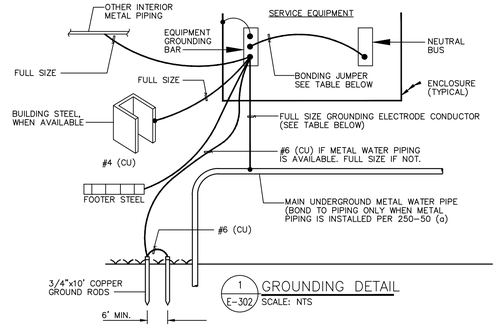

1 E-302 GROUNDING DETAIL
SCALE: NTS

GROUNDING ELECTRODE CONDUCTOR			BONDING JUMPER	
SERVICE SIZE	COPPER	ALUM	COPPER	ALUM
100	#8	–	#8	–
150	#6	#4	#6	#4
200	#4	#2	#4	#2
300	#2	#1/0	#2	#1/0
400	#1/0	#3/0	#1/0	#3/0
500	#1/0	#3/0	#1/0	#3/0
400	#2/0	#4/0	#2/0	#4/0
700	#2/0	#4/0	#2/0	#4/0
800	#2/0	#4/0	#2/0	#4/0
1000	#3/0	250MCM	#3/0	250MCM

TESTING
PROVIDE THE OWNER AND ENGINEER WITH A GROUNDING TEST REPORT INDICATING THE MAXIMUM OHMS ACHIEVED AT EACH GROUND ELECTRODE SYSTEM AT EACH BUILDING AND THE CONDITIONS UNDER WHICH THE TEST WAS MADE. A MAXIMUM OF 25 OHMS IS REQUIRED OR A MINIMUM OF THREE 10' GROUND RODS.

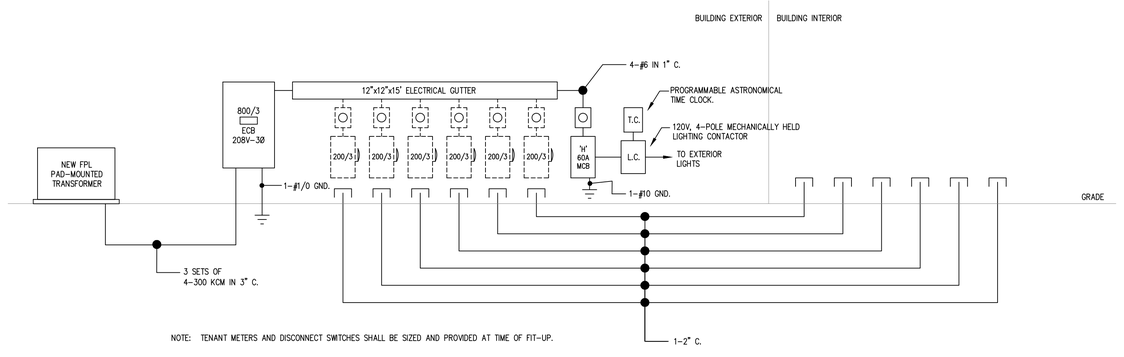

NOTE: TENANT METERS AND DISCONNECT SWITCHES SHALL BE SIZED AND PROVIDED AT TIME OF FIT-UP.

1 E-6.1 ELECTRICAL RISER DIAGRAM
SCALE: NTS

THE DOCUMENT CONTAINS COPYRIGHTED MATERIAL AND TRADE SECRET INFORMATION BELONGING EXCLUSIVELY TO WILLIAMSON DACAR ASSOCIATES, INC. ANY UNAUTHORIZED USE, DISCLOSURE, DISSEMINATION OR DUPLICATION OF ANY OF THE INFORMATION CONTAINED HEREIN MAY RESULT IN LIABILITY UNDER APPLICABLE LAWS.

WILLIAMSON DACAR ASSOCIATES
Architecture Planning Engineering
ARCHITECTURE / ENGINEERING / PLANNING
1550 LARGO ROAD, SUITE 106
CLEARWATER, FL 33760
PH (727) 725-0951 www.williamsondacar.com

Architect: AA 0002541
Engineering: EB 0006884

project CAINE ENGINEERING INCORPORATED
RESPONSIVE ENGINEERING
MECHANICAL ELECTRICAL PLUMBING/FIRE PROTECTION
1845 EASTERNAVE PLANTATION FL 33324
P 954.767.8889 F 954.767.8924
www.projectcaine.com
#PE0008840; QA0850

ROBERT B. CAINE LICENSE No. 37637 STATE OF FLORIDA PROFESSIONAL ENGINEER

WELLINGTON GREEN PARCEL 'F'
PHASE II RETAIL 'H' MODIFICATION
2545 SOUTH STATE ROAD 7
WELLINGTON, FLORIDA 33444

Revisions of Drawings

No.	Date	Revisions

Issues of Drawings

No.	Date	Issues
1	06.15.16	100% CD – PERMIT SET

Phase:
Checked:
Drawn: BDL

Drawing Title
ELECTRICAL DETAILS

WDA Proj. No.: 1526-01
Owner Proj. No.:
Scale: AS NOTED

Sheet No.
E-6.1
No. of Sheets:

DWG. NO.	DRAWING DESCRIPTION
FP-0.0	FIRE INDEX/NOTES/SYMBOLS
FP-2.1	FIRE FLOOR PLAN
FP-7.1	FIRE DETAILS

FIRE SPRINKLER HEAD SCHEDULE

SYM.	TYPE	ORIFICE SIZE	TEMP RATING	K FACTOR	COVERAGE AREA (WxL)	MANUFACTURER AND MODEL
●	PENDENT CONCEALED	1/2"	155° F	5.6	STANDARD	TYCO SERIES RFII, QUICK RESPONSE W/ GLASS BULB. (TY3531)
○	UPRIGHT	1/2"	155° F	5.6	STANDARD	TYCO SERIES TY-FRB, QUICK RESPONSE W/ GLASS BULB. (TY3131)
◀	HORIZONTAL SIDEWALL	1/2"	155° F	5.6	STANDARD	TYCO SERIES TY-FRB, QUICK RESPONSE W/ GLASS BULB. (TY3331)

1. THE FIRE PROTECTION SYSTEM INSTALLATION AND MATERIALS SHALL BE IN COMPLIANCE WITH THE 2014 EDITION OF THE FLORIDA BUILDING CODE AND NFPA 13 REQUIREMENTS.
2. SPRINKLER SYSTEM TO BE INSTALLED BY A STATE CERTIFIED FIRE PROTECTION CONTRACTOR. CONTRACTOR SHALL PROVIDE FLOW TEST NO LATER THAN 60 DAYS OLD, SHOP DRAWINGS AND HYDRAULIC CALCULATIONS IF REQUIRED BY THE AHJ.
3. CONTRACTOR SHALL COORDINATE WITH STRUCTURE, CEILING GRID AND ELEVATION, AND OTHER MECHANICAL AND ELECTRICAL SERVICES BEFORE FABRICATING AND INSTALLING SPRINKLER PIPING. MAKE OFFSETS IN PIPING AS REQUIRED PER FIELD CONDITIONS. MAINTAIN 6" CLEARANCE BETWEEN PIPING AND 1 AND 2 HOUR RATED WALLS INCLUDING CORRIDOR WALLS.
4. ALL VALVES SHALL BE OF DOMESTIC MANUFACTURER, U.L. LISTED FOR FIRE PROTECTION SERVICE AND RATED FOR 175 PSI WORKING PRESSURE. PROVIDE U.L. LISTED/ FM APPROVED TAMPER SWITCHES, WHERE SHOWN, AT CONTROL VALVE LOCATIONS.
5. SPRINKLER HEADS SHALL BE U.L. LISTED AND EQUIVALENT TO TYCO TY-FRB 5.6K, 155 DEG. QUICK RESPONSE UPRIGHT/PENDANT TYPE AND RATED FOR 175 PSI WORKING PRESSURE. CONTRACTOR SHALL PROVIDE AND TURN OVER TO THE OWNER AT LEAST (6) SIX SPARE SPRINKLER HEADS OF EACH TYPE AND TEMPERATURE RATING BEING INSTALLED.
6. CONTRACTOR SHALL PROVIDE FLUSHING CONNECTIONS WHERE SHOWN ON PLANS. PROVIDE A DRAIN CONNECTION FOR ALL TRAPPED SECTION OF PIPING
7. ABOVE GROUND PIPING SHALL BE U.L. LISTED SCHEDULE 10 BLACK STEEL PIPE. CONTRACTOR SHALL MAKE ALL NECESSARY OFFSETS PER JOB CONDITION AND INSTALL PIPING TIGHT TO STRUCTURE WHERE POSSIBLE. PIPING MATERIAL SHALL BE LISTED FOR 175 PSI. UNDERGROUND PIPING ALL MATERIALS SHAL BE OF DOMESTIC MANUFACTURER AND U.L. LISTED. FITTINGS SHALL BE MALLABLE IRON AND PROVIDED BY THE SAME MANUFACTURER.
8. PRESSURE TEST ABOVE GROUND PIPING HYDROSTATICALLY AT 200 PSI FOR 2 HOURS IN ACCORDANCE WITH NFPA 13. FLUSH OUT ALL PIPING IN ACCORDANCE WITH NFPA 13. PROVIDE TYPED AND COMPLETED NFPA-13 TEST CERTIFICATE FOR ABOVEGROUND PIPING.
9. CONTRACTOR SHALL PROVIDE FIRE WATCH WHILE THE SPRINKLER SYSTEM IS DISABLED DURING RENOVATION.
10. CONTRACTOR SHALL SURVEY THE A/C ZONE BEFORE BID TO DETERMINE THE EXTENT OF SPRINKLER PIPING SPRAY PAINTED YELLOW ABOVE THE CEILING. THE PAINT SHALL EITHER BE REMOVED OR PAINTED OVER RED IN THIS PROJECT. THE CONTRACTOR SHALL INDICATE THIS WORK IN THE BID AS AN ADD SERVICE.
11. WHEN FIRE SPRINKLER IS OUT OF SERVICE FOR ANY EXTENDED PERIOD OF TIME(GREATER THAN FOUR HOURS IN A 24 HOUR PERIOD) IN PROJECT WORK AREA, AN APPROVED FIRE WATCH SHALL BE PROVIDED FOR ALL PARTIES LEFT UNPROTECTED BY THE SHUTDOWN UNTIL THE FIRE SPRINKLER SYSTEM HAS BEEN RETURN TO SERVICE PER NFPA 101 (2009 EDITION) SECTION 9.7.6.1.
12. ALL WORK SHALL BE COORDINATED WITH EXISTING TRADES AND IN STRICT COMPLIANCE WITH ALL APPLICABLE CODES AND STANDARDS. ALL DOWN TIME TO BE COORDINATED WITH OWNER IN WRITING, AND SHALL BE BID AS PREMIUM TIME. ALL DOWN TIME WORK SHALL BE PERFORMED AT NIGHT OR AS DIRECTED BY THE OWNER.
13. ALL HOLES CREATED IN CEILING, PARTITIONS, ETC. AS A RESULT OF DEMOLITION SHALL BE PATCHED BACK TO MAINTAIN THE EXISTING FIRE AND SMOKE INTEGRITY.
14. GUARANTEE: THE COMPLETED INSTALLATION SHALL BE FULLY GUARANTEED AGAINST DEFECTIVE MATERIALS AND/OR IMPROPER WORKMANSHIP FOR A MINIMUM OF ONE YEAR FOR MATERIAL AND LABOR.
15. THE WORK THAT IS TO BE DONE UNDER THIS CONTRACT INCLUDES THE FURNISHING OF ALL LABOR, MATERIALS AND EQUIPMENT, PERMITS, FEES, INSPECTIONS, TESTS AND INSURANCE, REQUIRED FOR THE COMPLETION OF THE SYSTEMS AS SHOWN ON THE DRAWINGS AND/OR LISTED BELOW. CONTRACTOR SHALL VISIT THE SITE PRIOR TO THE BIDDING AND FAMILIARIZE HIMSELF WITH EXISTING EQUIPMENT, SYSTEMS AND BUILDING STRUCTURE.
16. ALL EXISTING LOCATIONS ARE TAKEN FROM EXISTING DRAWINGS AND KNOWN FIELD CONDITIONS. IT SHALL BE WITHIN THE CONTRACTOR'S SCOPE OF WORK TO VERIFY FIELD DIMENSIONS OF EXISTING EQUIPMENT OR SYSTEMS PRIOR TO DEMOLITION OR FABRICATION OF NEW WORK WHICH IS TO BE CONNECTED TO THE EXISTING. CONTRACTOR SHALL MAKE OFFSETS AS REQUIRED IN NEW AND/OR EXISTING PIPING AND CONDUIT TO ACCOMMODATE THE NEW WORK.
17. MATERIAL, EQUIPMENT AND PIPING SHALL ADHERE TO NFPA-13 REQUIREMENTS.
18. 1" THROUGH 2" PIPE SHALL BE SCH. 40 BLACK STEEL. 2½" AND GREATER PIPE SHALL BE SCH. 10 AND TESTED AS PER NFPA-13.
19. HANGERS SHALL BE SPACED AND LOCATED AS PER NFPA-13.
20. MINIMUM PIPE ALLOWED SHALL BE 1".
21. PIPE SHALL BE MARKED/PAINTED RED AS PER NFPA-13 "PIPE IDENTIFICATION".
22. CONTRACTOR TO PROVIDE HYDRAULIC CALCULATIONS.

FIRE PROTECTION GENERAL NOTES

THE DOCUMENT CONTAINS CONTAINS (MATERIAL AND TRADE SECRET INFORMATION) BELONGING EXCLUSIVELY TO WILLIAMSON DACAR ASSOCIATES, INC. ANY UNAUTHORIZED USE, DISCLOSURE, DISSEMINATION OR DUPLICATION OF ANY OF THE INFORMATION CONTAINED HEREIN MAY RESULT IN LIABILITY UNDER APPLICABLE LAWS.

WILLIAMSON DACAR ASSOCIATES
Architecture Planning Engineering
ARCHITECTURE / ENGINEERING / PLANNING
13500 EVERGREEN AVENUE, SUITE 106
CLEARWATER, FL 33762
PH (727) 725-0951 www.williamsondacar.com

Architect: AA 0002541
Engineering: EB 0006884

project CAINE ENGINEERING INCORPORATED
RESPONSIVE ENGINEERING
MECHANICAL ELECTRICAL PLUMBING/FIRE PROTECTION
1845 EAST BAY DRIVE, SUITE 1
LARGO, FLORIDA 33764
P 954.767.8889 F 954.767.8924
www.projectcaine.com
#FP0000860; EA#30691

ROBERT B. CAINE LICENSE No. 37637 STATE OF FLORIDA PROFESSIONAL ENGINEER

WELLINGTON GREEN PARCEL 'F'
PHASE II RETAIL 'H' MODIFICATION

2545 SOUTH STATE ROAD 7
WELLINGTON, FLORIDA 33444

Revisions of Drawings

No.	Date	Revisions

Issues of Drawings

No.	Date	Issues
1	06.15.16	100% CD – PERMIT SET

Phase:
Checked:
Drawn: BDL

Drawing Title
FIRE PROTECTION INDEX/NOTES

WDA Proj. No.: 1526-01
Owner Proj. No.:
Scale: AS NOTED

Sheet No.
FP-0.0
No. of Sheets.:

1 DDCV WITH TAMPER SWITCHES AND FDC. REFER TO CIVIL ENGINEER DRAWINGS FOR CONTINUATION AND EXACT LOCATION.

2 FIRE RISER WITH SUPERVISED CONTROL VALVE, FLOW SWITCH AND DRAIN VALVE. SEE FIRE RISER DETAIL.

3 INSPECTOR'S TEST CONNECTION. SEE DETAIL.

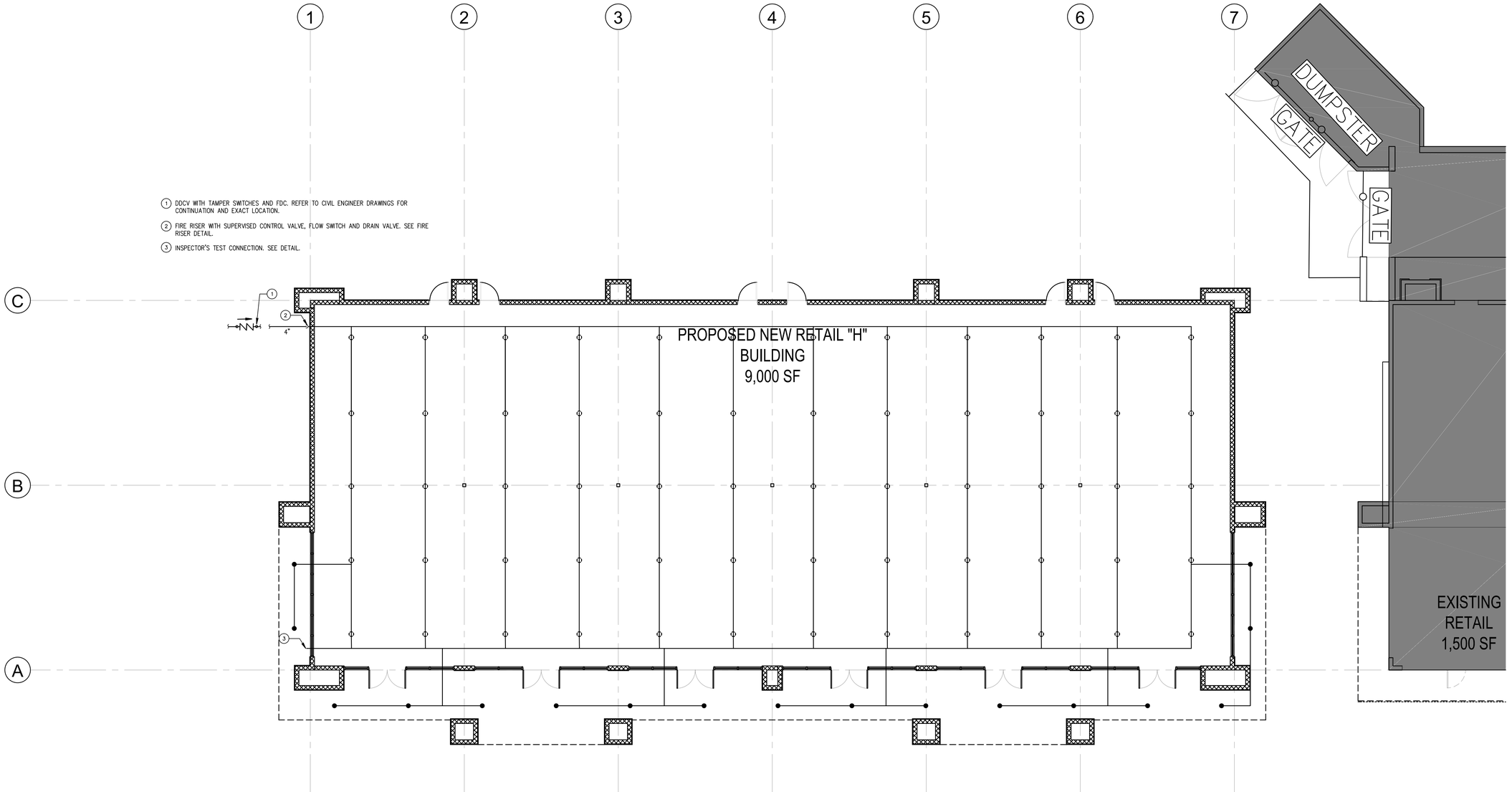

FIRE PROTECTION SITE FLOOR PLAN
SCALE: 1/8" = 1'-0"

THE DOCUMENT CONTAINING CONFIDENTIAL MATERIAL AND TRADE SECRET INFORMATION REMAINING EXCLUSIVELY ITS WILLIAMSON DACAR ASSOCIATES, INC. ANY UNAUTHORIZED USE, DISCLOSURE, DISSEMINATION OR DUPLICATION OF ANY OF THE INFORMATION CONTAINED HEREIN MAY RESULT IN LIABILITY UNDER APPLICABLE LAWS.

WILLIAMSON DACAR ASSOCIATES
Architecture / Planning / Interiors
ARCHITECTURE / ENGINEERING / PLANNING
1550 CLEARWATER-LARGO ROAD, SUITE 106
CLEARWATER, FL 33760
PH (727) 725-0951 www.williamsondacar.com

Architect: AA 0002541
Engineering: EB 0006884

project CAINE ENGINEERING INCORPORATED
RESPONSIVE ENGINEERING
MECHANICAL ELECTRICAL PLUMBING/FIRE PROTECTION
1545 EAST BAHIA BLVD
CLEARWATER, FLORIDA 33764
P 954.767.8888 F 954.767.8924
www.projectcaine.com
#PE0000860; QA#3681

ROBERT B. CAINE LICENSE No. 37637 STATE OF FLORIDA PROFESSIONAL ENGINEER

WELLINGTON GREEN PARCEL 'F'
PHASE II RETAIL 'H' MODIFICATION

2545 SOUTH STATE ROAD 7
WELLINGTON, FLORIDA 33414

Revisions of Drawings

No.	Date	Revisions

Issues of Drawings

No.	Date	Issues
1	06.15.16	100% CD – PERMIT SET

Phase:
Checked:
Drawn: BDL

Drawing Title

FIRE PROTECTION FLOOR PLAN

WDA Proj. No.: 1526–01
Owner Proj. No.:
Scale: AS NOTED

Sheet No.

FP-2.1

No. of Sheets.:

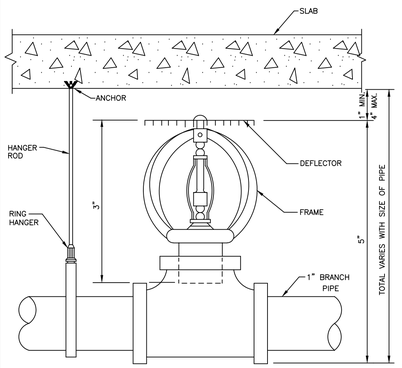

UPRIGHT HEAD DETAIL

NOT TO SCALE

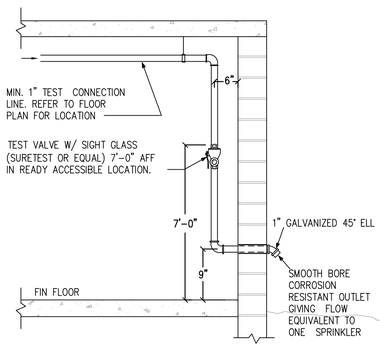

INSPECTOR'S TEST CONNECTION DETAIL

NOT TO SCALE

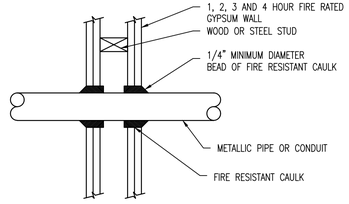

NOTES:

1. THE CAULK IS TO BE FORCED INTO THE ANNULAR SPACE TO THE MAXIMUM EXTENT POSSIBLE FLUSH WITH THE EXTERIOR OF THE PENETRATION SURFACE.
2. FINISH CAULKING WITH A 1/4" MINIMUM BEAD OF FIRE RESISTANT CAULK APPLIED TO THE PERIMETER OF THE CONDUIT/PIPE AT ITS EGRESS FROM THE WALL.
3. THE MAXIMUM ANNULAR SPACE IS NOT TO EXCEED 3/16".

UL SYSTEM # W-L-1001 (F RATINGS - 1, 2, 3 AND 4 HOUR

FIRE RATED PIPE PENETRATION DETAIL

NOT TO SCALE

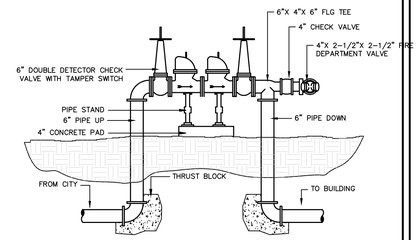

DOUBLE DETECTOR CHECK VALVE DETAIL

NTS DDDHECK

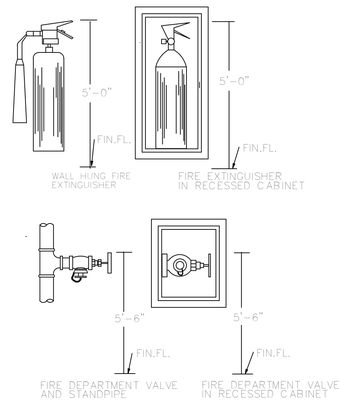

FIRE EQUIPMENT MOUNTING HEIGHTS DETAIL

NOT TO SCALE

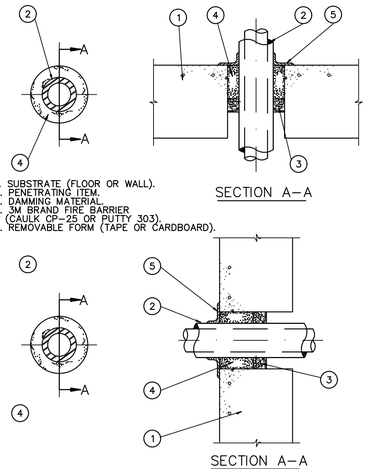

1. SUBSTRATE (FLOOR OR WALL).
2. PENETRATING ITEM.
3. DAMMING MATERIAL.
4. 3M BRAND FIRE BARRIER (CAULK CP-25 OR PUTTY 303).
5. REMOVABLE FORM (TAPE OR CARDBOARD).

FIRE RATED PIPE PENETRATION (2HR) DETAIL

NOT TO SCALE

PENETRATION FIRESTOP FOR METAL PIPE/CONDUIT THROUGH GYPSUM WALL BOARD
(CROSS-SECTIONAL VIEW OF PENETRATION SEAL ASSEMBLY)

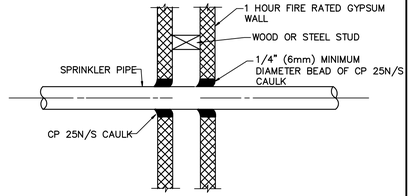

NOTES:

1. THE CAULK IS TO BE FORCED INTO THE ANNULAR SPACE TO THE MAXIMUM EXTENT POSSIBLE FLUSH WITH THE EXTERIOR OF THE PENETRATION SURFACE.
2. FINISH CAULKING WITH A 1/4" (6 mm) MINIMUM BEAD OF CP 25N/S CAULK APPLIED TO THE PERIMETER OF THE CONDUIT PIPE AT ITS EGREES FROM THE WALL.
3. THE MAXIMUM ANNUAL SPACE IS NOT TO EXCEED 3/16"(5mm).
4. INSTALL 3M FIRESTOP ON BOTH SIDES OF THE WALL.
5. THESE RECOMMENDATIONS ARE BASED ON PRODUCT PERFORMANCE PER ASTM E-814 (UL 1479) FIRE TEST AND UL THROUGH-PENETRATION FIRESTOP SYSTEM #147.

FIRE RATED PIPE PENETRATION (1HR) DETAIL

NOT TO SCALE

HANGER SPAN SCHEDULE

STEEL PIPE

DIA., IN.	SPAN, FT-IN	DIA., IN.	SPAN, FT-IN
1	7'-(2.1)	4	14'-(4.3)
1 1/2	9'-(2.1)	5	16'-(4.9)
2	10'-(3.1)	6	17'-(5.2)
2 1/2	11'-(3.4)	8	19'-(5.8)
3	12'-(3.7)	10	22'-(6.7)

COPPER TUBING

NOMINAL DIA., IN.	SPAN, FT-IN	NOMINAL DIA., IN.	SPAN, FT-IN
1/2	5'-(1.5)	2	9'-(2.7)
3/4	6'-(1.8)	2 1/2	10'-(3.1)
1	6'-(1.8)	3	10'-(3.1)
1 1/4	7'-(2.1)	3 1/2	11'-(3.4)
1 1/2	8'-(2.4)	4	12'-(3.7)

HANGER ROD SCHEDULE

PIPE SIZE	ROD SIZE	PIPE SIZE	ROD SIZE
UP TO 2"	3/8" DIA.	4" THRU 6"	5/8" DIA.
2 1/2 " TO 3"	1/2"	6" THRU 12"	7/8" DIA.
		14" THRU 16"	1" DIA.

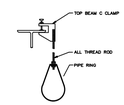

FOR STEEL BAR JOIST

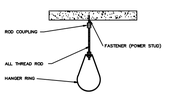

FOR CONCRETE CEILING

SPRINKLER PIPE HANGING DETAILS

NOT TO SCALE

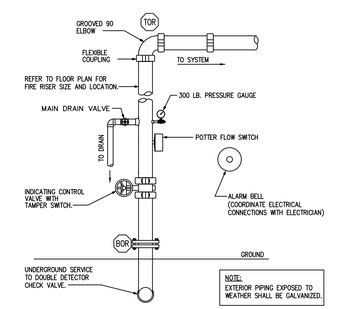

NOTE:
EXTERIOR PIPING EXPOSED TO WEATHER SHALL BE GALVANIZED.

FIRE RISER DETAIL

NOT TO SCALE

THIS DOCUMENT CONTAINS CONFIDENTIAL MATERIAL AND TRADE SECRET INFORMATION BELONGING EXCLUSIVELY TO WILLIAMSON DACAR ASSOCIATES, INC. ANY UNAUTHORIZED USE, DISCLOSURE, DISSEMINATION OR DUPLICATION OF ANY OF THE INFORMATION CONTAINED HEREIN MAY RESULT IN LIABILITY UNDER APPLICABLE LAWS.

WILLIAMSON DACAR ASSOCIATES
Architecture Planning Engineering
ARCHITECTURE / ENGINEERING / PLANNING
15500 LAGO DEL SOL BLVD, SUITE 106
CLEARWATER, FL 33760
PH (727) 725-0951 www.williamsondacar.com

Architect: AA 0002541
Engineering: EB 0006884

project CAINE ENGINEERING INCORPORATED
RESPONSIVE ENGINEERING
MECHANICAL ELECTRICAL PLUMBING/FIRE PROTECTION
1845 EAST BERRY BLVD. SUITE 204
WASHINGTON, PENNSYLVANIA 15301
P 724.747.8888 F 724.747.8924
www.projectcaine.com
#PE066888A01, CA#3551

ROBERT B. CAINE LICENSE No. 37637 STATE OF FLORIDA PROFESSIONAL ENGINEER

WELLINGTON GREEN PARCEL 'F'
PHASE II RETAIL 'H' MODIFICATION
2545 SOUTH STATE ROAD 7
WELLINGTON, FLORIDA 33444

Revisions of Drawings

No.	Date	Revisions

Issues of Drawings

No.	Date	Issues
1	06.15.16	100% CD - PERMIT SET

Phase:
Checked:
Drawn: BDL

Drawing Title
FIRE PROTECTION DETAILS

WDA Proj. No.: 1526-01
Owner Proj. No.:
Scale: AS NOTED

Sheet No.
FP-7.1
No. of Sheets:

THIS DOCUMENT CONTAINS COPYRIGHTED MATERIAL AND TRADE SECRET INFORMATION BELONGING EXCLUSIVELY TO WILLIAMSON DACAR ASSOCIATES, INC.
ANY UNAUTHORIZED USE, DISCLOSURE, DISSEMINATION OR DUPLICATION OF ANY OF THE INFORMATION CONTAINED HEREIN MAY RESULT IN LIABILITY UNDER APPLICABLE LAWS.

PLUMBING GENERAL NOTES

1. ALL WORK SHALL BE PREFORMED IN ACCORDANCE WITH THE FLORIDA BUILDING CODE 2014 EDITION.
2. DRAWINGS: REFER TO ALL DRAWINGS FOR COORDINATION OF THE PLUMBING WORK. DRAWINGS ARE DIAGRAMMATIC FOR ANY AND ALL DIMENSIONING OF SPECIFIC LOCATION SEE ARCHITECTURAL DRAWINGS OR MANUFACTURER'S REQUIREMENTS.
3. CONTRACTOR SHALL ARRANGE AND PAY FOR ALL PERMITS, LICENSES, INSPECTIONS AND TESTS. OBTAIN THE REQUIRED CERTIFICATES AND PRESENT TO OWNER.
4. GUARANTEE: THE COMPLETED INSTALLATION SHALL BE FULLY GUARANTEED AGAINST DEFECTIVE MATERIALS AND/OR IMPROPER WORKMANSHIP FOR A MINIMUM OF ONE YEAR FOR MATERIAL AND LABOR.
5. ALL HORIZONTAL SANITARY PIPING SHALL SLOPE AT $\frac{1}{8}$ INCH PER FOOT MINIMUM FOR 3" AND LARGER AND AT $\frac{1}{4}$" SLOPE FOR 2" PIPES AND SMALLER. UNLESS OTHERWISE STATED.
6. DISTANCE OF TRAP FROM VENT. EACH FIXTURE TRAP SHALL HAVE A PROTECTING VENT LOCATED SO THAT THE SLOPE AND THE DEVELOPED LENGTH IN THE FIXTURE DRAIN FROM THE TRAP WEIR TO THE VENT FITTING ARE WITHIN THE REQUIREMENTS SET FORTH IN TABLE 909.1
7. THE WORK THAT IS TO BE DONE UNDER THIS CONTRACT INCLUDES THE FURNISHING OF ALL LABOR, MATERIALS AND EQUIPMENT, PERMITS, FEES, INSPECTIONS, TESTS AND INSURANCE, REQUIRED FOR THE COMPLETION OF THE SYSTEMS AS SHOWN ON THE DRAWINGS AND/OR LISTED BELOW. CONTRACTOR SHALL VISIT THE SITE PRIOR TO THE BIDDING AND FAMILIARIZE HIMSELF WITH EXISTING EQUIPMENT, SYSTEMS AND BUILDING STRUCTURE.
8. ALL EXISTING LOCATIONS ARE TAKEN FROM EXISTING DRAWINGS AND KNOWN FIELD CONDITIONS. IT SHALL BE WITHIN THE CONTRACTOR'S SCOPE OF WORK TO VERIFY FIELD DIMENSIONS OF EXISTING EQUIPMENT OR SYSTEMS PRIOR TO DEMOLITION OR FABRICATION OF NEW WORK WHICH IS TO BE CONNECTED TO THE EXISTING. CONTRACTOR SHALL MAKE OFFSETS AS REQUIRED IN NEW AND/OR EXISTING PIPING AND CONDUIT TO ACCOMMODATE THE NEW WORK.
9. ALL WORK SHALL BE COORDINATED WITH EXISTING TRADES AND IN STRICT COMPLIANCE WITH ALL APPLICABLE CODES AND STANDARDS. ALL DOWN TIME TO BE COORDINATED WITH OWNER IN WRITING, AND SHALL BE BID AS PREMIUM TIME. ALL DOWN TIME WORK SHALL BE PERFORMED AT NIGHT OR AS DIRECTED BY THE OWNER.
10. ALL HOLES CREATED IN CEILING, PARTITIONS, ETC. AS A RESULT OF DEMOLITION SHALL BE PATCHED BACK TO MAINTAIN THE EXISTING FIRE AND SMOKE INTEGRITY.
11. SLEEVE AND FIRE STOP PENETRATIONS OF RATED WALLS, FLOORS, CEILINGS AND ROOFS. FLASH AND COUNTER FLASH ALL ROOF PENETRATIONS.
12. ALL MATERIAL, EQUIPMENT, AND APPARATUS SHALL BE NEW, EXCEPT THAT CALLED FOR AS BEING REUSED OR FURNISHED BY OTHERS. ALL MATERIAL SHALL BE APPROVED BY THE ARCHITECT/ENGINEER BEFORE INSTALLATION.
13. CONTRACTOR SHALL CONNECT WATER AND WASTE TO EQUIPMENT FURNISHED BY OTHERS AS INDICATED ON DRAWINGS. ALL FIXTURES TO BE PROTECTED AGAINST WATER HAMMER BY SHOCK ARRESTERS.
14. ALL PIPING IS TO BE PLENUM RATED WHERE EXPOSED TO PLENUM. WALLS/CHASE OR OPENING THAT IS EXPOSED TO PLENUM THAT HAS PIPING INCLUDED.
15. CONTRACTOR SHALL SUBMIT SHOP DRAWINGS FOR APPROVAL, WITHIN 30 DAYS OF SIGNING CONTRACT, A MINIMUM OF 5 COPIES OF FULLY DESCRIPTIVE, LITERATURE, INCLUDING BUT NOT LIMITED TO: WATER HEATERS, AND PLUMBING FIXTURES. NO WORK SHALL PROCEED WITHOUT THE APPROVAL OF THESE SUBMITTALS.
16. WHERE CONNECTION TIES INTO HORIZONTAL STACK THE CONNECTION SHALL BE A MINIMUM OF 10X THE STACK DIAMETER DOWNSTREAM OF THE VERTICAL TO HORIZONTAL TRANSITION. UNLESS OTHERWISE STATED.
17. SANITARY TEE CAN BE USED ONLY IN THE VERTICAL POSITION. TEE WYE CAN BE USED FOR BOTH HORIZONTAL AND VERTICAL ASSEMBLY.
18. SHORT TURN FITTINGS SHOULD NEVER BE INSTALLED ON HORIZONTAL PIPING, BUT MAY BE USED VERTICALLY WHEN TRANSFERRING TO A HORIZONTAL.
19. PIPING IS NEVER TO RUN OVER ELECTRICAL EQUIPMENT.
20. ENGINEER IS TO BE IMMEDIATELY NOTIFIED IF THIS OCCURS.
21. PROVIDE ACCESS PANELS TO ALL VALVES, HAMMER ARRESTORS AND STUDOR VENTS LOCATED WITHIN CHASES OR NON-ACCESSIBLE CEILINGS. REFER TO ARCHITECTURAL DRAWINGS FOR CEILING TYPES.
22. IN THE EVENT A BEAM SLEEVE PENETRATION IS REQUIRED, COORDINATE PENETRATIONS WITH ALL TRADES, THE ARCHITECT AND THE STRUCTURAL ENGINEER.
23. REFER TO ARCHITECTURAL DRAWINGS FOR FIXTURE LOCATIONS AND MOUNTING HEIGHTS.
24. PROVIDE CLEANOUTS IN ACCORDANCE WITH THE FBC (PLUMBING). PROVIDE TRAP PRIMER CONNECTION TO ALL FLOOR DRAINS, SLEEVE ALL SOFT COPPER PENETRATIONS THROUGH RATED PENETRATIONS AND FIRESTOP.
25. THERE SHALL BE NO LENGTH GREATER THAN 2' FROM THE VENT CONNECTION FOR ANY FUTURE DRAIN OUTLETS.
26. INSULATE ALL STORM WATER HORIZONTAL PIPING, OFFSETS AND THE BODIES OF ALL ROOF DRAINS TO PREVENT CONDENSATION.

PLUMBING GENERAL NOTES

27. ALL HOT AND COLD WATER PIPING SHALL BE COPPER TYPE-L, SFBC 46041(C) COMPATIBLE UNLEADED SOLDER AND DIELECTRIC FITTINGS AS REQUIRED. PIPE INSULATION SHALL BE PROVIDED FOR ALL HOT WATER AND HOT WATER RETURN PIPING WITH 1" THICK FIBERGLASS INSULATION WITH VAPOR BARRIER JACKET, FLAME SPREAD OF 25 OR LESS, SMOKE DEVELOPED RATING OF LESS THAN 50, OWENS CORNING OR APPROVED EQUAL.
28. COMPATIBLE UNLEADED SOLDER AND DIELECTRIC FITTINGS AS REQUIRED. DIELECTRIC FITTINGS TO BE PROVIDED AT CONNECTIONS BETWEEN TWO DIFFERENT TYPES OF METAL PIPING.
29. SANITARY WASTE AND VENT PIPING SHALL BE INSTALLED w/NO-HUB JOINTS. ALL HORIZONTAL RWL PIPING SHALL HAVE 1" THICK FIBERGLASS INSULATION WITH VAPOR BARRIER JACKET, FLAME SPREAD OF 25' OR LESS, SMOKE DEVELOPED RATING OF LESS THAN 50, OWENS CORNING OR APPROVED EQUAL.
30. CONTRACTOR TO PROVIDE SHUT-OFF VALVES ON ALL HOT AND COLD WATER LINES AT CONNECTION TO MAIN LINES.
31. PLUMBING FIXTURES:
32. FIXTURES SHALL BE COMPLETE WITH DRAINS, TRAPS, $\frac{1}{4}$ TURN VALVES, BRAIDED SUPPLY HOSE AND ANY OTHER ACCESSORY REQUIRED.
33. MATERIALS:
A. PIPING:
a. SOIL, WASTE AND VENT: SANITARY PIPE, PVC, DWV, SCHEDULE 40. STANDARD WEIGHT CAST IRON, EPOXY COATED SCH 40 CAST IRON. MUST BE CISPI APPROVED. FOAM CORE WILL NOT BE ACCEPTABLE
b. DOMESTIC WATER AND HEATING HOT WATER: COPPER PIPE, TYPE "L" WITH SWEAT WROUGHT COPPER FITTINGS. TYPE "M" IN CONCEALED PACES IS ACCEPTABLE. ISOLATE PIPING FROM CONCRETE WITH INSULATING MATERIAL.
c. CONDENSATE DRAIN: COPPER TYPE "L" ABOVE SLAB ON GRADE. DWV PVC UNDERGROUND.
d. DOMESTIC WATER SUPPLY ASSEMBLY: CHROME FINISH TUBING. WITH QUARTER TURN ANGLE SHUT OFF BALL VALVE
e. INSULATION: INSULATE ALL HORIZONTAL PIPING WITH 1" THICK FIBERGLASS INSULATION, WITH SELF SEALING JACKET. INSULATE CONDENSATE PIPING AND STORM WATER PIPING WITH 1/2" ELASTOMERIC INSULATION.
f. SANITARY PIPING: SCHEDULE 40 CAST IRON, PVC
g. STORM WATER PIPING: SCHEDULE 40 CAST IRON, PVC, DWV FOAM CORE WILL NOT BE ACCEPTABLE.
h. PIPING IN PLENUMS SHALL BE CAST IRON OR FIRE RATED.

34. ALL WATER HEATERS SHALL MEET THE STANDARDS OF THE LATEST ENERGY EFFICIENCY CODE.
35. PIPING TESTING AND CLEANING:
A. TEST: ALL SANITARY AND DOMESTIC WATER SUPPLY PIPING SHALL BE TESTED FOR LEAKS BEFORE PIPING IS CONCEALED OR CONNECTED TO EQUIPMENT AND PLUMBING FIXTURES.
B. DISINFECTION: ALL DOMESTIC WATER PIPING SHALL BE DISINFECTED BY INTRODUCING A SOLUTION OF CALCIUM HYPOCHLORITE OF 50 PARTS PER MILLION OF CHLORIDE AND AS PER AWWA STANDARDS.
36. VALVES: DOMESTIC WATER VALVES SHALL BE OF BRONZE BODY, SWEAT ENDS.
37. ALL EXTERIOR CLEAN OUTS SHALL BE TERMINATED UP TO GRADE AND SHALL BE MARKED. COVER SHALL BE INCLUDED.
38. CONTRACTOR SHALL COORDINATE EXACT LOCATION OF SANITARY, STORM DOMESTIC WATER, AND CONDENSATE PIPING BEFORE STARTING ANY WORK. NOTIFY ARCHITECT/ENGINEER OF ANY DEVIATIONS FROM DESIGN DRAWINGS.
39. CONTRACTOR SHALL PROVIDE FOR EXISTING VALVES NOT CLOSING WHEN CONNECTING TO EXISTING PIPING IN BID.
40. CONTRACTOR SHALL PROVIDE STOP VALVES AND VACUUM BREAK BEFORE ALL OPERATING HANDLES AND FAUCETS, WHERE REQUIRED.
41. UNDER GROUND WATER PIPING SHALL BE 2' MINIMUM AWAY FROM SANITARY PIPING. WHERE WATER LINE AND SANITARY LINE CROSS, WATER SHALL BE INSTALLED MINIMUM OF 12" ABOVE SANITARY AND SHALL BE EITHER SCHEDULE 40 PVC OR DOUBLE WALLED PIPING.
42. PIPES PASSING THROUGH CONCRETE, CINDER OR OTHER CORROSIVE MATERIAL SHALL BE PROTECTED AGAINST EXTERNAL CORROSION BY A PROTECTIVE SHEATHING OR WRAPPING AS PER THE FBC 305.1.
43. ALL PIPING BEING INSTALLED WITHIN A PLENUM ARE TO BE PLENUM RATED. IN THE EVENT THAT THERE IS EXISTING PIPING WITHIN A PLENUM CONTRACTOR SHALL FIRE WRAP OR USE OTHER MEANS TO MAKE THE PIPING PLENUM RATED. FIRE CAULK AT PIPING PENETRATIONS SHALL ALSO BE PROVIDED TO MAINTAIN PLENUM RATING.
44. ALL PRODUCTS SHALL BE MANUFACTURED WITHIN THE UNITED STATES WHERE POSSIBLE. PIPING AND RAW MATERIALS WITH ORIGINS OUTSIDE OF THE UNITED STATES SHALL BE IDENTIFIED AS PART OF THE BID. PIPING, BOLTS, FITTINGS AND MISCELLANEOUS METAL PRODUCTS ORIGINATING FROM CHINA WILL NOT BE PERMITTED.
45. PRODUCTS USED FOR THIS PROJECT SHALL COMPLY WITH APPLICABLE UNITED STATES STANDARDS. COMPLIANCE WITH A FOREIGN STANDARD AS AN ALTERNATE SHALL NOT BE ACCEPTED.
46. MAXIMUM DISTANCE OF FIXTURE TRAP FROM VENT TO BE DETERMINED BY TABLE 909.1 OF THE FBC (PLUMBING).

DWG. NO.	DRAWING DESCRIPTION
P-0.0	PLUMBING INDEX/NOTES/SYMBOLS
P-2.1	PLUMBING FLOOR PLAN
P-2.2	PLUMBING ROOF PLAN
P-6.1	PLUMBING ISOMETRICS
P-6.2	PLUMBING ISOMETRICS
P-7.1	PLUMBING DETAILS

PLUMBING SYMBOL LEGEND

SYMBOL	DESCRIPTION
———————	SANITARY LINE
— — —	VENT LINE
———————	COLD WATER LINE
———————	RAIN WATER LEADER
⊣I	CLEAN OUT
HW	HOT WATER
CW	COLD WATER
CO	CLEAN OUT
SOV	SHUT OFF VALVE
VTR	VENT THRU ROOF
RWL	RAIN WATER LEADER (STORM WATER)
RD	ROOF DRAIN
OD	OVERFLOW DRAIN

PLUMBING FIXTURE SCEHDULE

NAME	FIXTURE	MODEL #	ACCESSORIES
RD	ROOF DRAIN AND OVERFLOW DRAIN COMBINATION	Z163	OVERFLOW GOOSENECK DRAIN-DOWN SPOUT NOZZLE Z199

WILLIAMSON DACAR ASSOCIATES© INCORPORATED
Architecture Planning Engineering
ARCHITECTURE / ENGINEERING / PLANNING
15500 LIGHTWAVE DRIVE SUITE 106
CLEARWATER, FL. 33760
PH (727) 725-0951 www.williamsondacar.com

Architect: AA 0002541
Engineering: EB 0006884

project CAINE ENGINEERING INCORPORATED
RESPONSIVE ENGINEERING
MECHANICAL ELECTRICAL PLUMBING/FIRE PROTECTION
1948 EAST SUNRISE BLVD, SUITE #1
FORT LAUDERDALE, FLORIDA 33304
P. 954.767.8886 F. 954.767.9934
www.projectcaine.com
#P05000009451, CA#28087

ROBERT B. CAINE LICENSE No. 37637 STATE OF FLORIDA PROFESSIONAL ENGINEER

WELLINGTON GREEN PARCEL "F"
PHASE II RETAIL "H" MODIFICATION

2545 SOUTH STATE ROAD 7
WELLINGTON, FLORIDA 33414

Revisions of Drawings

No.	Date	Revisions

Issues of Drawings

No.	Date	Issues
1	06.15.16	100% CD – PERMIT SET

Phase:
Checked:
Drawn: BDL

Drawing Tiltle

PLUMBING INDEX/NOTES

WDA Proj. No.: 1526-01
Owner Proj. No.:
Scale: AS NOTED

Sheet No.

P-0.0

No. of Sheets.:

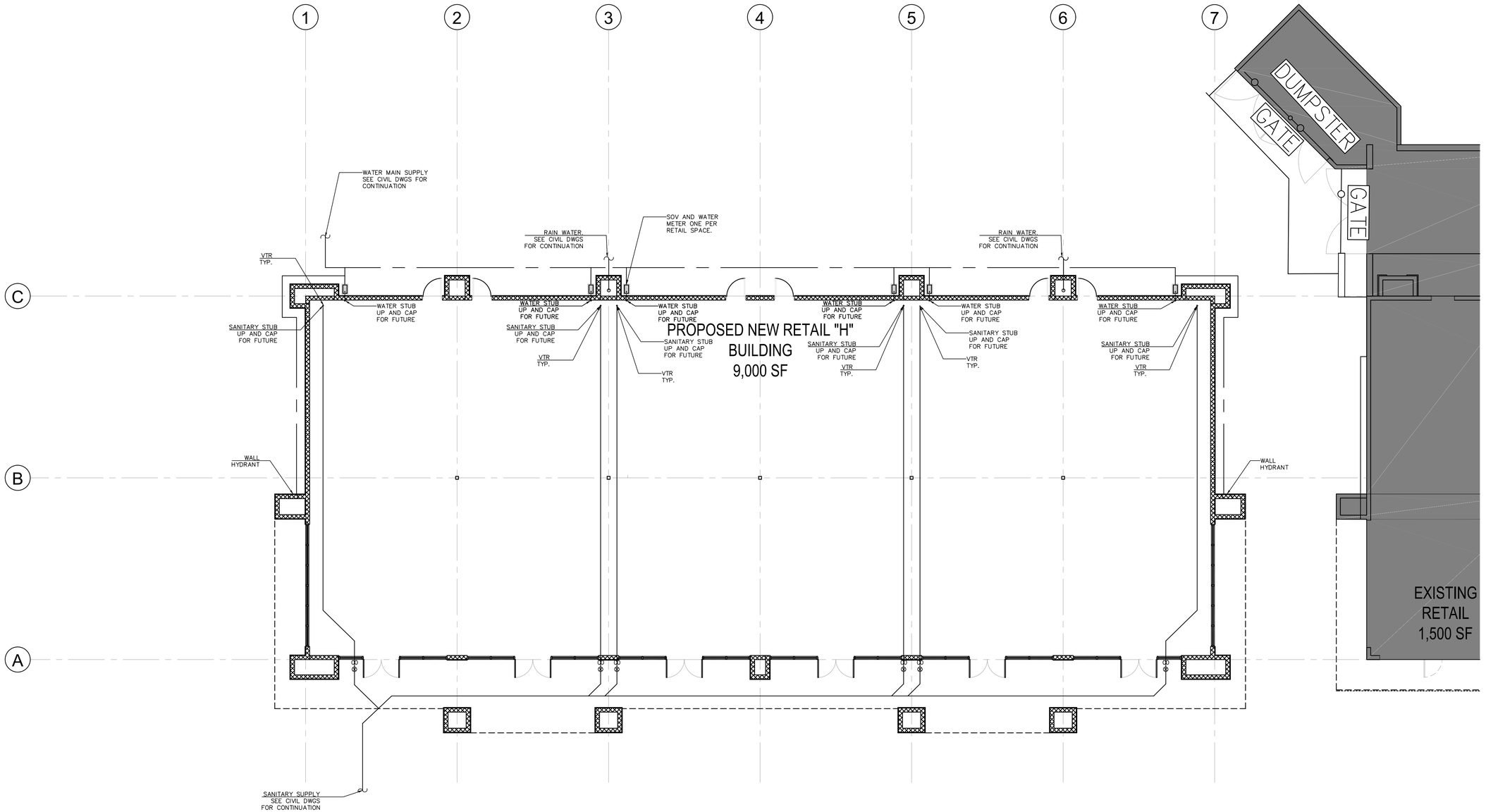

PLUMBING SITE FLOOR PLAN

SCALE: 1/8" = 1'-0"

THIS DOCUMENT CONTAINS COPYRIGHTED MATERIAL AND TRADE SECRET INFORMATION BELONGING EXCLUSIVELY TO WILLIAMSON DACAR ASSOCIATES, INC.
ANY UNAUTHORIZED USE, DISCLOSURE, DISSEMINATION OR DUPLICATION OF ANY OF THE INFORMATION CONTAINED HEREIN MAY RESULT IN LIABILITY UNDER APPLICABLE LAWS.

WILLIAMSON DACAR ASSOCIATES
Architecture / Planning / Engineering
ARCHITECTURE / ENGINEERING / PLANNING
1550 LARGO ROAD, SUITE 106
CLEARWATER, FL 33760
PH (727) 725-0951 www.williamsondacar.com

Architect: AA 0002541
Engineering: EB 0006884

project CAINE ENGINEERING INCORPORATED
RESPONSIVE ENGINEERING
MECHANICAL ELECTRICAL PLUMBING/FIRE PROTECTION
1845 EAST BERGEN PLACE, SUITE 204
FORT COLLINS, COLORADO 80524
P 970.797.8888 F 970.797.8924
www.projectcaine.com
#PE0000050401, CA#29551

WELLINGTON GREEN PARCEL "F"
PHASE II RETAIL "H" MODIFICATION

2545 SOUTH STATE ROAD 7
WELLINGTON, FLORIDA 33444

Revisions of Drawings

No.	Date	Revisions

Issues of Drawings

No.	Date	Issues
1	06.15.16	100% CD – PERMIT SET

Phase:
Checked:
Drawn: BDL

Drawing Title

PLUMBING
FLOOR PLAN

WDA Proj. No.: 1526-01
Owner Proj. No.:
Scale: AS NOTED

Sheet No.

P-2.1

No. of Sheets.:

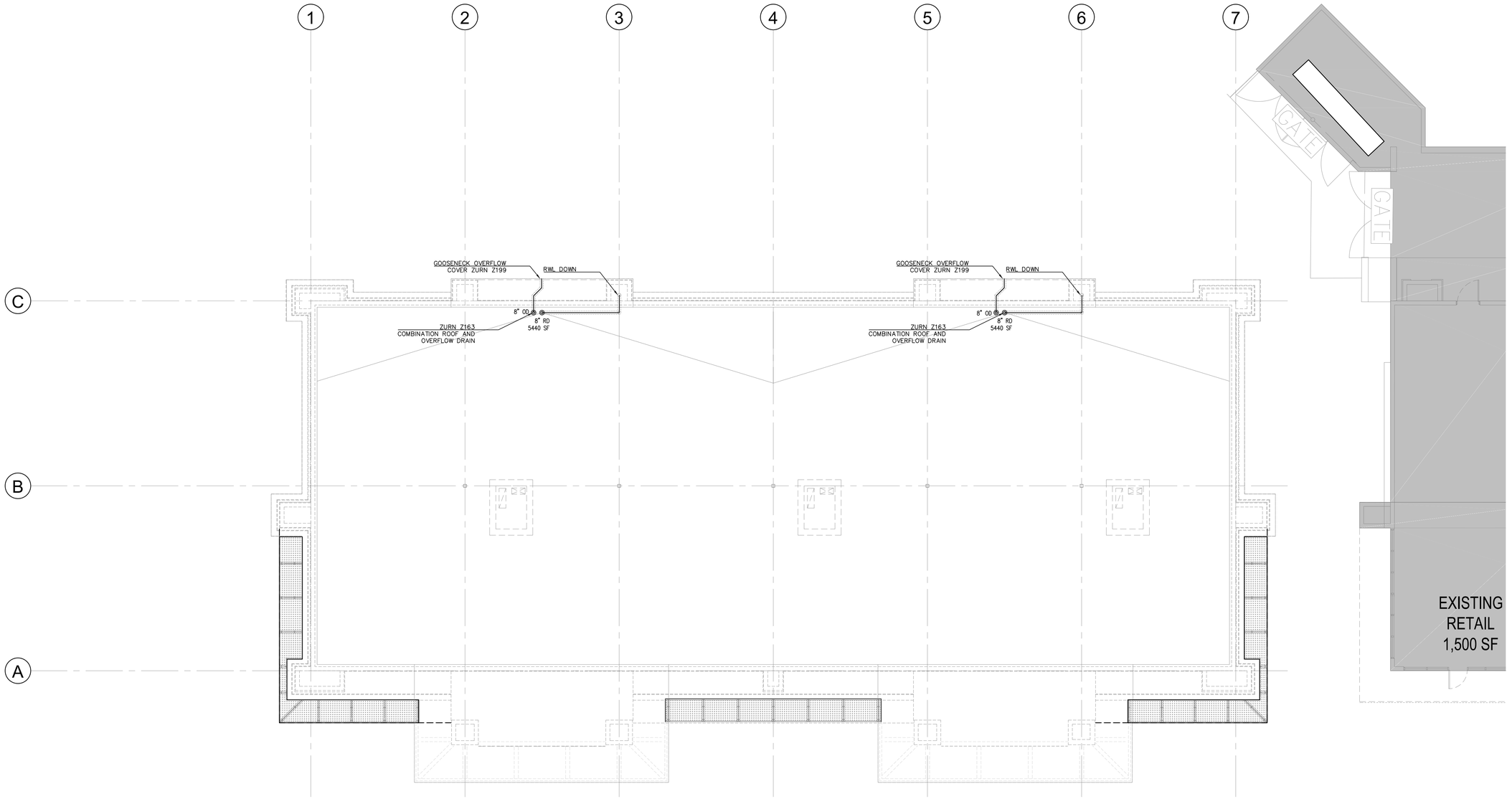

PLUMBING SITE ROOF PLAN
SCALE: 1/8" = 1'-0"

THE DOCUMENT CONTAINS COPYRIGHTED MATERIAL AND TRADE SECRET INFORMATION BELONGING EXCLUSIVELY TO WILLIAMSON DACAR ASSOCIATES, INC. ANY UNAUTHORIZED USE, DISCLOSURE, DISSEMINATION OR DUPLICATION OF ANY OF THE INFORMATION CONTAINED HEREIN MAY RESULT IN LIABILITY UNDER APPLICABLE LAWS.

WILLIAMSON DACAR ASSOCIATES
Architecture / Planning / Interiors
ARCHITECTURE / ENGINEERING / PLANNING
1550 GULF BLVD, SUITE 106
CLEARWATER, FL 33760
PH (727) 725-0951 www.williamsondacar.com

Architect: AA 0002541
Engineering: EB 0006884

project CAINE ENGINEERING INCORPORATED
RESPONSIVE ENGINEERING
MECHANICAL ELECTRICAL PLUMBING/FIRE PROTECTION
1845 EAST BERGE RD.
SARASOTA, FLORIDA 34240
P 954.767.8889 F 954.767.8924
robert@projectcaine.com
#PE0000850; CA#29551

ROBERT B. CAINE
LICENSE
No. 37637
STATE OF FLORIDA
PROFESSIONAL ENGINEER

WELLINGTON GREEN PARCEL "F"
PHASE II RETAIL "H" MODIFICATION

2545 SOUTH STATE ROAD 7
WELLINGTON, FLORIDA 33444

Revisions of Drawings

No.	Date	Revisions

Issues of Drawings

No.	Date	Issues
1	06.15.16	100% CD – PERMIT SET

Phase:
Checked:
Drawn: BDL

Drawing Title
PLUMBING
ROOF PLAN

WDA Proj. No.: 1526-01
Owner Proj. No.:
Scale: AS NOTED

Sheet No.
P-2.2
No. of Sheets.:

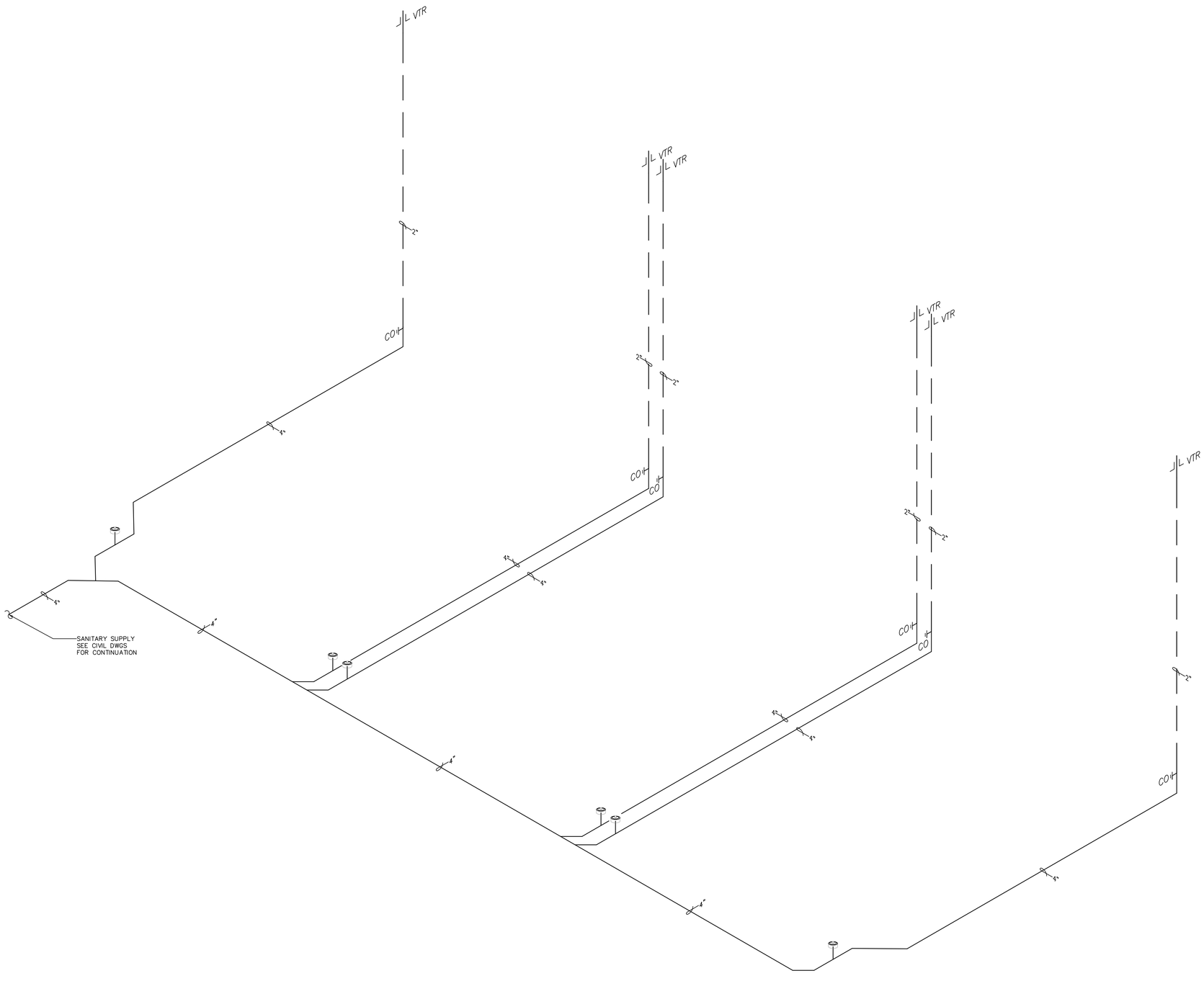

SANITARY PIPING ISOMETRIC

NO SCALE

THIS DOCUMENT CONTAINS COPYRIGHTED MATERIAL AND TRADE SECRET INFORMATION BELONGING EXCLUSIVELY TO WILLIAMSON DACAR ASSOCIATES, INC. ANY UNAUTHORIZED USE, DISCLOSURE, DISSEMINATION OR DUPLICATION OF ANY OF THE INFORMATION CONTAINED HEREIN MAY RESULT IN LIABILITY UNDER APPLICABLE LAWS.

WILLIAMSON DACAR ASSOCIATES INCORPORATED
Architecture Planning Engineering
ARCHITECTURE / ENGINEERING / PLANNING
1550 LIGHTWAVE DRIVE SUITE 106
CLEARWATER, FL 33760
PH (727) 725-0951 www.williamsondacar.com

Architect: AA 0002541

Engineering: EB 0006884

project CAINE ENGINEERING INCORPORATED
RESPONSIVE ENGINEERING
MECHANICAL ELECTRICAL PLUMBING/FIRE PROTECTION
1504 EAST SUNRISE BLVD SUITE #1
FORT LAUDERDALE FLORIDA 33304
P 954.767.8888 F 954.767.9934
www.projectcaine.com
#P0006884(E); CAP0007

ROBERT B. CAINE
LICENSE
No. 37637
STATE OF FLORIDA
PROFESSIONAL ENGINEER

WELLINGTON GREEN PARCEL "F"
PHASE II RETAIL "H" MODIFICATION

2545 SOUTH STATE ROAD 7
WELLINGTON, FLORIDA 33414

Revisions of Drawings

No.	Date	Revisions

Issues of Drawings

No.	Date	Issues
1	06.15.16	100% CD – PERMIT SET

Phase:

Checked:

Drawn: BDL

Drawing Title

PLUMBING ISOMETRICS

WDA Proj. No.: 1526-01

Owner Proj. No.:

Scale: AS NOTED

Sheet No.

P-6.1

No. of Sheets.:

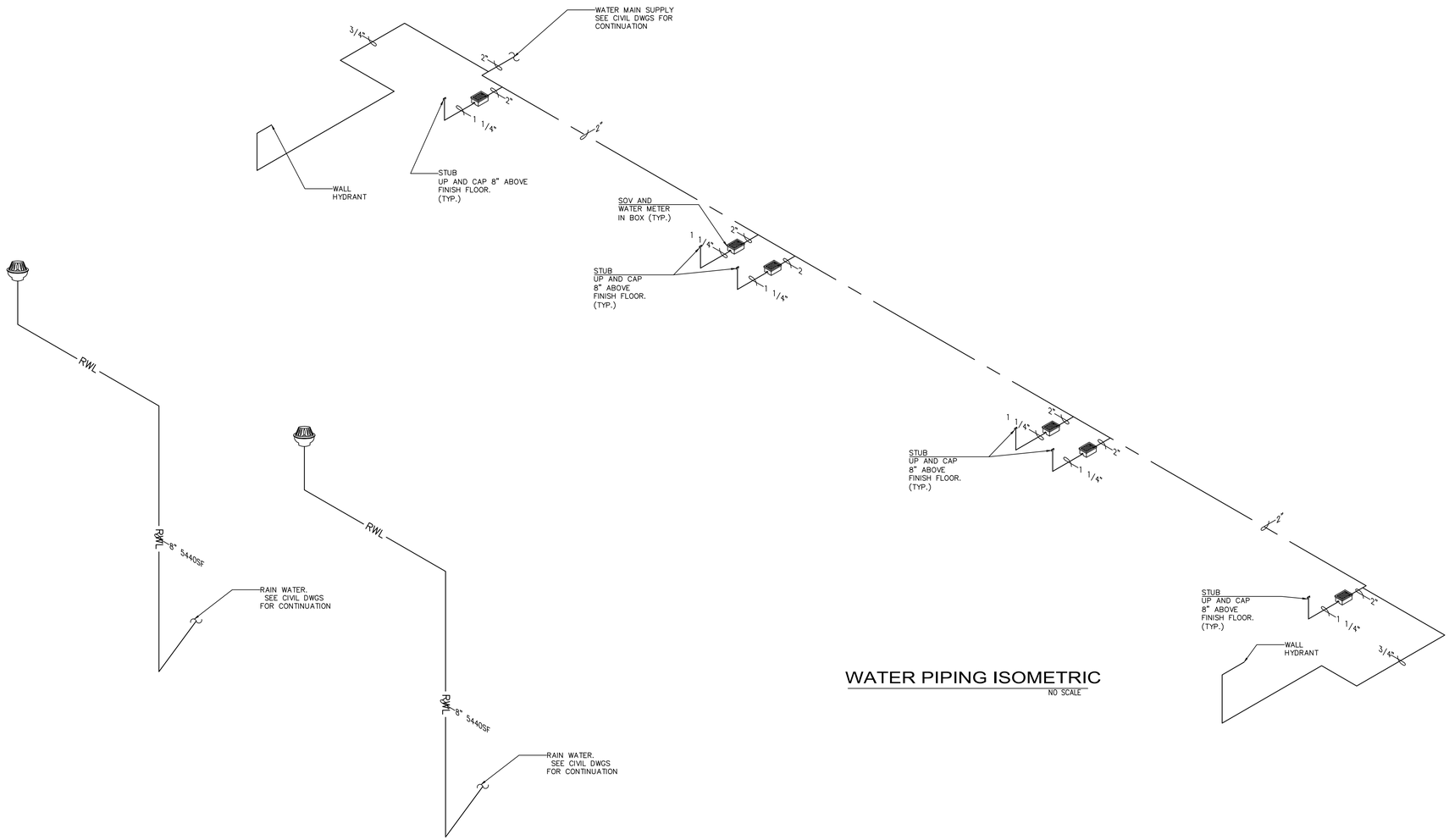

RAIN WATER ISOMETRIC

NO SCALE

WATER PIPING ISOMETRIC

NO SCALE

THIS DOCUMENT CONTAINS COPYRIGHTED MATERIAL AND TRADE SECRET INFORMATION BELONGING EXCLUSIVELY TO WILLIAMSON DACAR ASSOCIATES, INC.
ANY UNAUTHORIZED USE, DISCLOSURE, DISSEMINATION, OR DUPLICATION OF ANY OF THE INFORMATION CONTAINED HEREIN MAY RESULT IN LIABILITY UNDER APPLICABLE LAWS.

WILLIAMSON DACAR ASSOCIATES
Architecture Planning Engineering
ARCHITECTURE / ENGINEERING / PLANNING
1550 LARGO ROAD, SUITE 106
CLEARWATER, FL 33760
PH (727) 725-0951 www.williamsondacar.com

Architect: AA 0002541
Engineering: EB 0006884

project CAINE ENGINEERING INCORPORATED
RESPONSIVE ENGINEERING
MECHANICAL ELECTRICAL PLUMBING/FIRE PROTECTION
1845 EAST ATLANTIC BLVD, SUITE 4
POMPANO BEACH, FLORIDA 33060
P 954.787.8888 F 954.787.8924
www.projectcaine.com
#PE0000 8041, EA#0001

ROBERT B. CAINE LICENSE No. 37637 STATE OF FLORIDA PROFESSIONAL ENGINEER

WELLINGTON GREEN PARCEL "F"
PHASE II RETAIL "H" MODIFICATION

2545 SOUTH STATE ROAD 7
WELLINGTON, FLORIDA 33444

Revisions of Drawings

No.	Date	Revisions

Issues of Drawings

No.	Date	Issues
1	06.15.16	100% CD – PERMIT SET

Phase:
Checked:
Drawn: BDL

Drawing Title

PLUMBING ISOMETRICS

WDA Proj. No.: 1526-01
Owner Proj. No.:
Scale: AS NOTED

Sheet No.

P-6.2

No. of Sheets.:

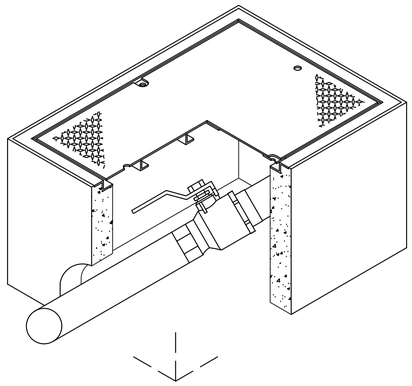

SHUT OFF VALVE IN BOX DETAIL
N.T.S

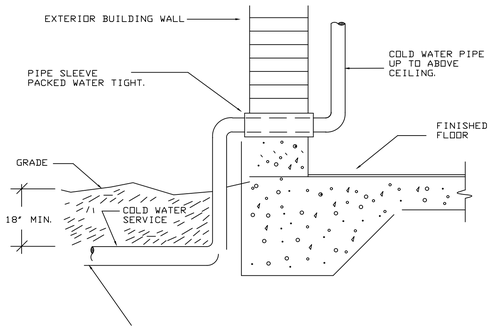

MAIN WATER SERVICE DETAIL
N.T.S

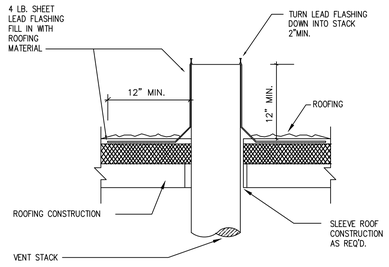

NOTE: VENT PIPE SHALL NOT BE WITHIN 10' HORIZONTALLY OF ANY DOOR, OPERABLE WINDOW OR ANY INTAKE INTO THE BUILDING UNLESS IT IS 3' OR GREATER ABOVE THE TOP OF SUCH OPENING. AS PER PLUMBING FBC 2014.

VENT THRU ROOF DETAIL
N.T.S

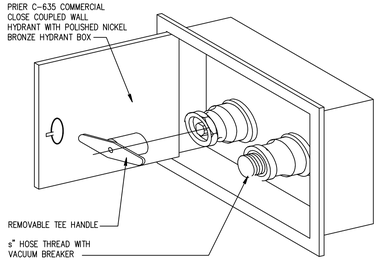

WALL HYDRANT DETAIL

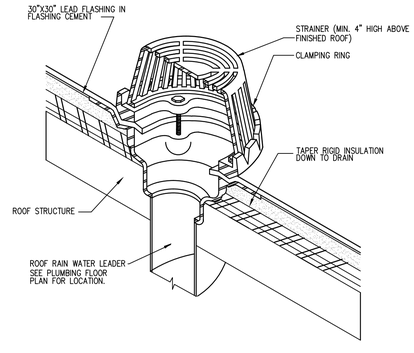

ROOF DRAIN DETAIL
N.T.S

THE DOCUMENT CONTAINS COPYRIGHTED MATERIAL AND TRADE SECRET INFORMATION BELONGING EXCLUSIVELY TO WILLIAMSON DACAR ASSOCIATES, INC. ANY UNAUTHORIZED USE, DISCLOSURE, DISSEMINATION OR DUPLICATION OF ANY OF THE INFORMATION CONTAINED HEREIN MAY RESULT IN LIABILITY UNDER APPLICABLE LAWS.

WILLIAMSON DACAR ASSOCIATES
Architecture Planning Engineering
ARCHITECTURE / ENGINEERING / PLANNING
1550 GULF BOULEVARD, SUITE 106
CLEARWATER, FL 33760
PH (727) 725-0951 www.williamsondacar.com

Architect: AA 0002541
Engineering: EB 0006884

project CAINE ENGINEERING INCORPORATED
RESPONSIVE ENGINEERING
MECHANICAL ELECTRICAL PLUMBING/FIRE PROTECTION
1845 EAST BAYSHORE BLVD, SUITE 214
P 954.767.8889 F 954.767.8924
#PE0000886A1, CA#0000

ROBERT B. CAINE LICENSE No. 37637 STATE OF FLORIDA PROFESSIONAL ENGINEER

WELLINGTON GREEN PARCEL "F"
PHASE II RETAIL "H" MODIFICATION

2545 SOUTH STATE ROAD 7
WELLINGTON, FLORIDA 33444

Revisions of Drawings

No.	Date	Revisions

Issues of Drawings

No.	Date	Issues
1	06.15.16	100% CD – PERMIT SET

Phase:
Checked:
Drawn: BDL

Drawing Title
PLUMBING DETAILS

WDA Proj. No.: 1526-01
Owner Proj. No.:
Scale: AS NOTED

Sheet No.
P-7.1
No. of Sheets.:

EXISTING VEGETATION INVENTORY

NO.	BOTANICAL NAME	COMMON NAME	SIZE	ACTION
22	PHOENIX DACTILYFERA 'MEDJOOL'	'MEDJOOL' DATE PALM	10' CW	PRESERVE
23	QUERCUS VIRGINIANA	OAK	10" CAL., 22' HT.	PRESERVE
24	QUERCUS VIRGINIANA	OAK	10" CAL., 25' HT.	PRESERVE
25	QUERCUS VIRGINIANA	OAK	8" CAL., 20' HT.	PRESERVE
26	QUERCUS VIRGINIANA	OAK	8" CAL., 18' HT.	PRESERVE
27	QUERCUS VIRGINIANA	OAK	6" CAL., 20' HT.	PRESERVE
28	ROYSTONEA ELATA	FLORIDA ROYAL PALM	12' OA	RELOCATE ON SITE
29	QUERCUS VIRGINIANA	OAK	10" CAL., 24' HT.	RELOCATE ON SITE
30	SABAL PALMETTO	CABBAGE PALM		RELOCATE ON SITE
31	SABAL PALMETTO	CABBAGE PALM		RELOCATE ON SITE
32	SABAL PALMETTO	CABBAGE PALM		RELOCATE ON SITE
33	SABAL PALMETTO	CABBAGE PALM		RELOCATE ON SITE
34	SABAL PALMETTO	CABBAGE PALM		RELOCATE ON SITE
35	QUERCUS VIRGINIANA	OAK		PRESERVE
36	MYRCIANTHES FRAGRANS	SIMPSON'S STOPPER		PRESERVE
37	DELONIX REGIA	ROYAL POINCIANA	20' HT.	PRESERVE
38	DELONIX REGIA	ROYAL POINCIANA	20' HT.	PRESERVE
39	QUERCUS VIRGINIANA	OAK		PRESERVE
40	SABAL PALMETTO	CABBAGE PALM		PRESERVE
41	QUERCUS VIRGINIANA	OAK		PRESERVE
42	SABAL PALMETTO	CABBAGE PALM		PRESERVE
43	SABAL PALMETTO	CABBAGE PALM		PRESERVE
44	QUERCUS VIRGINIANA	OAK		PRESERVE
45	QUERCUS VIRGINIANA	OAK		PRESERVE
46	QUERCUS VIRGINIANA	OAK		PRESERVE
47	QUERCUS VIRGINIANA	OAK		PRESERVE
48	QUERCUS VIRGINIANA	OAK		PRESERVE
49	QUERCUS VIRGINIANA	OAK		PRESERVE
50	SABAL PALMETTO	CABBAGE PALM		PRESERVE
51	QUERCUS VIRGINIANA	OAK		PRESERVE
52	TAXODIUM DISTICHUM	BALD CYPRESS	25' HT.	PRESERVE
53	TAXODIUM DISTICHUM	BALD CYPRESS	25' HT.	PRESERVE
54	PHOENIX DACTILYFERA 'MEDJOOL'	'MEDJOOL' DATE PALM	20' CW	PRESERVE
55	ROYSTONEA ELATA	FLORIDA ROYAL PALM	20' GW	PRESERVE
56	ROYSTONEA ELATA	FLORIDA ROYAL PALM	20' GW	PRESERVE
57	ROYSTONEA ELATA	FLORIDA ROYAL PALM	20' GW	PRESERVE
58	QUERCUS VIRGINIANA	OAK		PRESERVE
59	ROYSTONEA ELATA	FLORIDA ROYAL PALM	20' GW	PRESERVE
60	QUERCUS VIRGINIANA	OAK		PRESERVE
79	QUERCUS VIRGINIANA	OAK		PRESERVE
80	QUERCUS VIRGINIANA	OAK	14' HT. X 10' SPR., 5-6"CAL	RELOCATE ON SITE
81	QUERCUS VIRGINIANA	OAK	14' HT. X 10' SPR., 5-6"CAL	RELOCATE ON SITE
82	QUERCUS VIRGINIANA	OAK	14' HT. X 10' SPR., 5-6"CAL	RELOCATE ON SITE
83	QUERCUS VIRGINIANA	OAK	14' HT. X 10' SPR., 5-6"CAL	RELOCATE ON SITE
84	QUERCUS VIRGINIANA	OAK	14' HT. X 10' SPR., 5-6"CAL	RELOCATE ON SITE
85	QUERCUS VIRGINIANA	OAK	14' HT. X 10' SPR., 5-6"CAL	RELOCATE ON SITE
86	QUERCUS VIRGINIANA	OAK	14' HT. X 10' SPR., 5-6"CAL	RELOCATE ON SITE
87	QUERCUS VIRGINIANA	OAK	14' HT. X 10' SPR., 5-6"CAL	RELOCATE ON SITE
88	QUERCUS VIRGINIANA	OAK	14' HT. X 10' SPR., 5-6"CAL	RELOCATE ON SITE
89	QUERCUS VIRGINIANA	OAK	14' HT. X 10' SPR., 5-6"CAL	RELOCATE ON SITE
90	LAGERSTROEMIA INDICA	CRAPE MYRTLE	10' HT.	RELOCATE ON SITE
91	ILEX CASSINE	DAHOON HOLLY		TO BE REMOVED
92	QUERCUS VIRGINIANA	OAK	14' HT. X 10' SPR., 5-6"CAL	RELOCATE ON SITE
93	SABAL PALMETTO	CABBAGE PALM	10-15' BT	RELOCATE ON SITE
94	SABAL PALMETTO	CABBAGE PALM	10-15' BT	PRESERVE
95	SABAL PALMETTO	CABBAGE PALM	10-15' BT	PRESERVE
96	QUERCUS VIRGINIANA	OAK		PRESERVE
97	SABAL PALMETTO	CABBAGE PALM		PRESERVE
98	SABAL PALMETTO	CABBAGE PALM		PRESERVE
99	SABAL PALMETTO	CABBAGE PALM		PRESERVE
100	QUERCUS VIRGINIANA	OAK		PRESERVE
101	QUERCUS VIRGINIANA	OAK		PRESERVE
102	QUERCUS VIRGINIANA	OAK		PRESERVE

NO.	BOTANICAL NAME	COMMON NAME	SIZE	ACTION
103	ILEX CASSINE	DAHOON HOLLY		TO BE REMOVED
104	ILEX CASSINE	DAHOON HOLLY		TO BE REMOVED
105	WODYETIA BIFURCATA	FOXTAIL PALM	10' GW	PRESERVE
106	WODYETIA BIFURCATA	FOXTAIL PALM	10' GW	PRESERVE
107	LIGUSTRUM LUCIDUM	LIGUSTRUM TREE		PRESERVE
108	DYPSIS LUTESCENS	ARECA PALM		PRESERVE
109	SYAGRUS ROMANZOFFIANA	QUEEN PALM	10' GW	PRESERVE
110	SYAGRUS ROMANZOFFIANA	QUEEN PALM	10' GW	PRESERVE
111	SYAGRUS ROMANZOFFIANA	QUEEN PALM	10' GW	PRESERVE
112	DELONIX REGIA	ROYAL POINCIANA		PRESERVE
113	DELONIX REGIA	ROYAL POINCIANA		PRESERVE
114	QUERCUS VIRGINIANA	OAK		PRESERVE
115	QUERCUS VIRGINIANA	OAK		PRESERVE
116	QUERCUS VIRGINIANA	OAK		PRESERVE
117	QUERCUS VIRGINIANA	OAK		PRESERVE
118	QUERCUS VIRGINIANA	OAK		PRESERVE
119	CHRYSOBALANUS ICACO 'RED TIP'	RED TIP COCOPLUM		PRESERVE
120	TRIPSACUM DACTYLOIDES	FAKAHATCHEE GRASS		PRESERVE
121	PHILODENDRON SELLOUM	SPLIT LEAF PHILODENDRON		PRESERVE
122	MYRCIANTHES FRAGRANS	SIMPSON'S STOPPER		PRESERVE
123	TRIPSACUM DACTYLOIDES	FAKAHATCHEE GRASS		PRESERVE
124	CHRYSOBALANUS ICACO 'RED TIP'	RED TIP COCOPLUM		PRESERVE
125	TRIPSACUM DACTYLOIDES	FAKAHATCHEE GRASS		PRESERVE
126	ZAMIA MARITIMA	CARDBOARD PALM		PRESERVE
127	JASMINUM VOLUBILE	WAX JASMINE		PRESERVE
128	ILEX VOM. 'SCHILLING'S DWARF'	DWARF SCHILLING'S HOLLY		PRESERVE
129	ALPINIA ZERUMBET 'VARIEGATA'	VARIEGATED SHELL GINGER		PRESERVE
130	JASMINUM VOLUBILE	WAX JASMINE		PRESERVE
131	ILEX VOM. 'SCHILLINGS' DWARF'	DWARF SCHILLING'S HOLLY		PRESERVE
132	ALPINIA ZERUMBET 'VARIEGATA'	VARIEGATED SHELL GINGER		PRESERVE
133	JASMINUM VOLUBILE	WAX JASMINE		PRESERVE
134	ILEX VOM. 'SCHILLINGS' DWARF'	DWARF SCHILLING'S HOLLY		PRESERVE
135	ALPINIA ZERUMBET 'VARIEGATA'	VARIEGATED SHELL GINGER		PRESERVE
136	JASMINUM VOLUBILE	WAX JASMINE		PRESERVE
137	ILEX VOM. 'SCHILLINGS' DWARF'	DWARF SCHILLING'S HOLLY		PRESERVE
138	JASMINUM VOLUBILE	WAX JASMINE		TO BE REMOVED
139	VIBURNUM ODORATISSIMUM	SWEET VIBURNUM		TO BE REMOVED
140	VIBURNUM ODORATISSIMUM	SWEET VIBURNUM		PRESERVE

(Note: Some landscaping noted on this list is outside of the Limit of Work and is shown for informational purposes only.

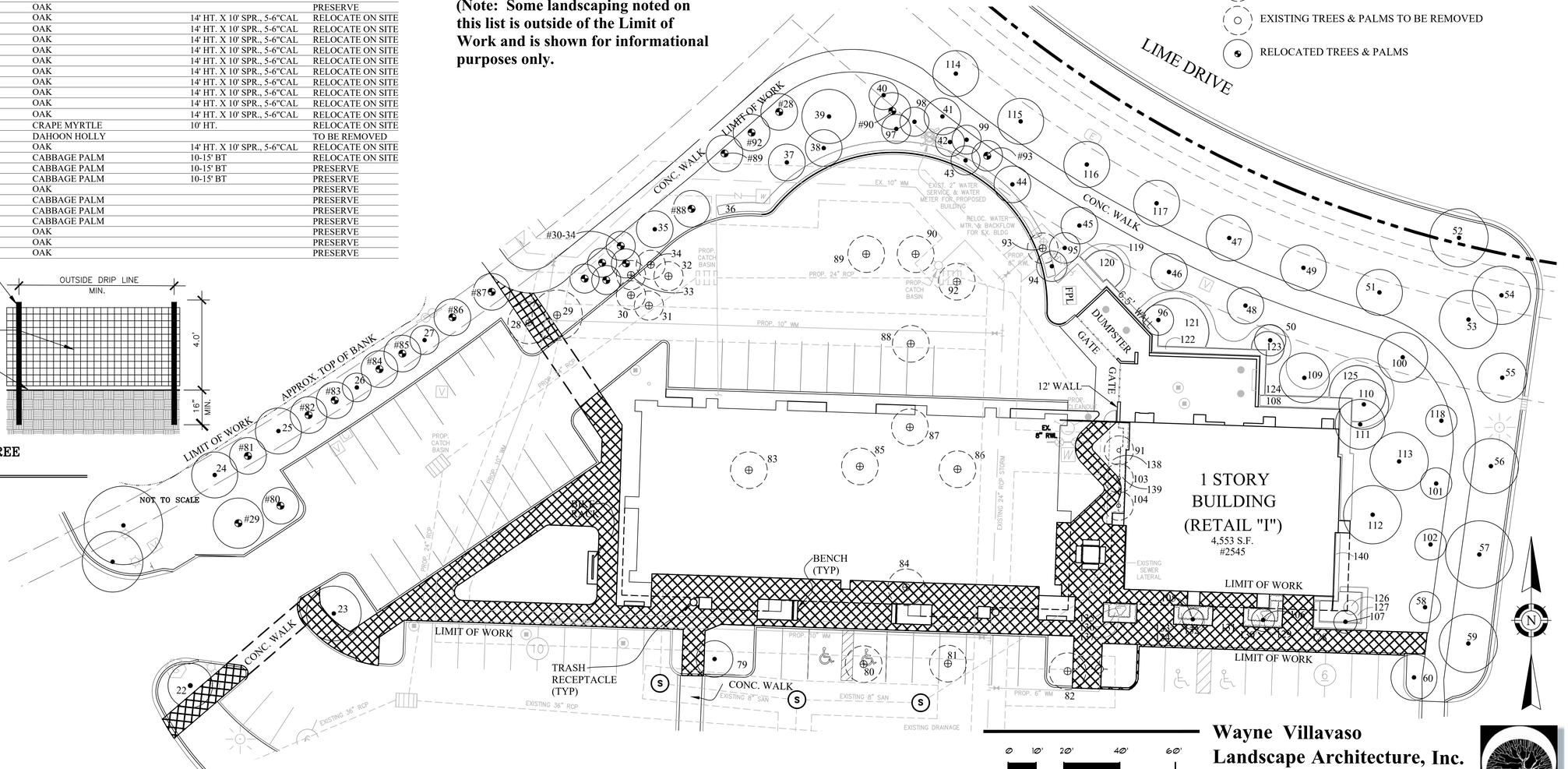

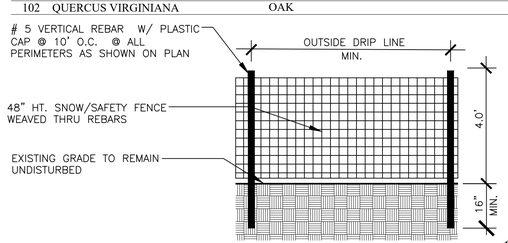

EXISTING/RELOCATED TREE PROTECTION DETAIL

NOT TO SCALE

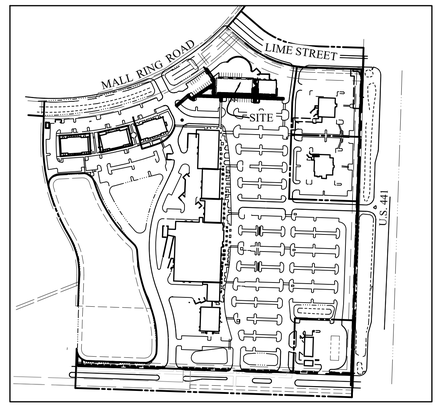

VICINITY MAP

SCALE: 1"=300'

EXISTING TREE SYMBOL LEGEND

- EXISTING TREES & PALMS TO REMAIN
- EXISTING TREES & PALMS TO BE RELOCATED
- EXISTING TREES & PALMS TO BE REMOVED
- RELOCATED TREES & PALMS

These plans are based on information/drawings by WDA received via e-mail on 4/25/16 & 5/2/16 and civil by HE received via e-mail on 3/25/16.

Wayne Villavaso Landscape Architecture, Inc.

268 Flamingo Drive West Palm Beach, FL 33401
Ph. (561) 820-1566 www.WVLAInc.com
Land Planning /Landscape Architecture FL., N.C., N.Y.

WILLIAMSON DACAR ASSOCIATES
Landscape Planning Engineering
ARCHITECTURE / ENGINEERING / PLANNING
1550 CLEARWATER, FL 33756 SUITE 106
PH (727) 725-0951 www.williamsondacar.com

Architect: AA 0002541
Landscape Architect: WV 0000694

REGISTERED LANDSCAPE ARCHITECT WAYNE VILLAVASO LA 694 STATE OF FLORIDA

WELLINGTON GREEN PARCEL "F"
PHASE II RETAIL "H" MODIFICATION
PETITION NO. 16-18 (2016-08 ASA 53)
2545 SOUTH STATE ROAD 7
WELLINGTON, FLORIDA 33414

Revisions of Drawings

No.	Date	Revisions

Issues of Drawings

No.	Date	Issues
1	06.15.16	100% CD - PERMIT SET

Phase:
Checked: WEV
Drawn: WEV

Drawing Title

EXISTING VEGETATION INVENTORY

WDA Proj. No.: 1526-01
Owner Proj. No.:
Scale: 1"=20'

Sheet No.

L1.0

No. of Sheets.:

PLANT AND MATERIALS LIST

	SYM	ITEM	SPECIFICATION	QTY
Relocated Trees & Palms				
◇	rLI	LAGERSTROEMIA SP. CRAPE MYRTLE	10' HEIGHT; RELOCATED FROM ON-SITE	1
✱◇	rQV	QUERCUS VIRGINIANA LIVE OAK	+/- 14-16' HT. 6-8" CAL. RELOCATE FROM ON-SITE	12
	rRR	ROYSTONEA ELATA FLORIDA ROYAL PALM	12' O.A. RELOCATED FROM ON-SITE	1
✱◇	rSP	SABAL PALMETTO CABBAGE PALM	C.W./C.T. HT. VARIES; RELOCATE FROM ON-SITE INTO STAGGERED GROUP	6
Proposed Trees & Palms				
	LL	LIGUSTRUM LUCIDUM LIGUSTRUM TREE	10' HT. X 8' SPR., M.T., TRIM TO 5' C.T. PER L.A., MATCHED SPECIMENS	3
✱◇	QV	QUERCUS VIRGINIANA LIVE OAK	14' HT. X 7-8' SPR., 3.5" CAL., 5' C.T., MATCHED	6
	SS	SENNA SURATTENSIS GLAUCOUS CASSIA	14' HT. X 5-6' SPR., 5' C.T., FULL BRANCHING PATTERNS	5
	WB	WODYETIA BIFURCATA FOXTAIL PALM	12' G.W.; MATCHED, FLA. FANCY	7
Proposed Shrubs				
✱◇	COC	CHRYSOBALANUS ICACO 'RED TIP' RED TIP COCOPLUM	3 GAL., 24" HT. X 24" SPR., FULL TO BASE, 24" O.C.	105
◇	CRO	CODIAEUM VAR. 'PETRA' PETRA CROTON	3 GAL., 24" HT. X 24" SPR., FULL TO BASE, 24" O.C.	114
	IXN	IXORA 'NORA GRANT' NORA GRANT IXORA	3 GAL., 24" HT. X 24" SPR., FULL TO BASE, 24" O.C.	125
	JAS	JASMNE VOLUBILE WAX JASMINE	3 GAL., 24" HT. X 24" SPR., FULL TO BASE, 24" O.C.	239
	TAB	TABERNAEMONTANA PINWHEEL JASMINE	3 GAL. 24" HT. X 24" SPR. FULL TO BASE, 36" O.C.	25
	VBS	VIBURNUM SUSPENSUM SANDANKWA VIBURNUM	3 GAL., 24" HT. X 24" SPR., FULL TO BASE, 24" O.C.	71
Proposed Groundcover				
✱◇	ILV	ILEX VOM. 'SCHILLINGS DWARF' SCHILLING'S DWARF' HOLLY	3 GAL., 15" HT. X 15" SPR., FULL TO BASE, 24" O.C.	139
✱◇	NEP	NEPHROLEPIS BISERRATA SWORD FERN	1 GAL., 12" HT. X 12" SPR., 18" O.C. FULL	53
	POD	PODOCARPUS MACROPHYLLA 'PRINGLES' PRINGLES JAPANESE YEW	3 GAL. 15" HT. X 15" SPR. FULL TO BASE, 24" O.C.	107
	RAP	RAPHIOLEPIS INDICA 'PINK' PINK INDIAN HAWTHORN	3 GAL., 14" HT. X 14" SPR., FULL TO BASE, 18" O.C.	70
Miscellaneous				
	FERT	FERTILIZER TAB & GRANULAR	PER PLANTING SPECIFICATIONS	TBD
	MUL3	MULCH	SHREDDED EUCALYPTUS 3" DEEP	TBD
	SOIL	PLANTING SOIL	PER PLANTING SPECIFICATIONS	TBD
	SOD	STENOTAPHRUM SEC. 'FLORATAM' ST. AUGUSTINE FLORATAM SOD	FRESH SOLID SOD REPLACE AS NECESSARY	TBD

Shrub Species Mix

Req. # of Shrubs	Min. # of Species
1-10	2
11-100	3
101-150	4
151-200	5
200+	6

LANDSCAPE REQUIREMENTS

CATEGORY	REQUIREMENTS	REQUIRED	PROVIDED
INTERIOR LANDSCAPE	(LANDSCAPING NOT IN PERIMETER BUFFERS OR VEHICULAR USE AREA) Total Site Area = 49,331 S.F.		
INTERIOR	1 TREE/2500 SF 3 SH / 2500 SF	19 TREES 59 SHRUBS	39 TREES * 449 SHRUBS **
FOUNDATION PLANTING 8' WIDE @ NEW BUILDING (COUNTED TOWARD INTERIOR REQUIREMENTS)	40% OF 420'=168' TOTAL 1 TREE/20 LF REQ. FNDT. SHRUB & G'COVER MASS	168' L.F. 8 TREES 257 SHRUBS 118 GCOVER	193' L.F. 8 TREES * 257 SHRUBS 118 GCOVER
VEHICULAR USE AREA (NOT COUNTED TOWARD INTERIOR REQUIREMENTS)			
TERMINAL ISLANDS	12' W. (EXCL. CURBS) W/ 1 TREE PER ISLAND	7 TREES	7 TREES *
INTERIOR ISLANDS	8' W. (EXCL. CURBS) 1 ISLAND PER 10 PARKING SPACES - 1 TREE/ISLAND	3 TREES	4 TREES *

* PROVIDED TREES INCLUDES EXISTING, PROPOSED, AND RELOCATED TREES & PALMS NOT IN VEHICULAR USE AREAS OR IN BUFFERS. EXISTING & NEW ROYAL & FOXTAIL PALMS CALC. AT 1:1; AND EXISTING, RELOCATED, & NEW CABBAGE PALMS CALC. AT 3:1

** INCLUDES PROPOSED SHRUBS

SHRUBS COUNTED TOWARDS MEETING LANDSCAPE REQUIREMENTS ARE A MINIMUM OF 24" IN HEIGHT IMMEDIATELY AFTER PLANTING.

THERE ARE SHRUBS AND GROUND COVERS INCLUDED IN THESE PLANS THAT ARE ABOVE THE CODE REQUIREMENTS AND NOT SHOWN IN THE REQUIREMENTS CHART ABOVE.

NOTES:

1. PLANTING PLAN MATCHES THE CHARACTER OF THE EXISTING MALL.

2. ALL MECHANICAL, ELECTRICAL, WATER EQUIPMENT, DUMPSTER ENCLOSURES, EXHAUST VENTS, ETC. LOCATED ON THE GROUND WILL BE ENTIRELY SCREENED FROM PUBLIC VIEW AS PER VILLAGE OF WELLINGTON ARTICLE 7 REQUIREMENTS.

3. IRRIGATION PLANS ARE PREPARED PER ARTICLE 7, CHAPTER 3.
4. NO TREES, ETC WITHIN 10' OF WATER & SEWER AND 15' 0F LIGHT POLES.

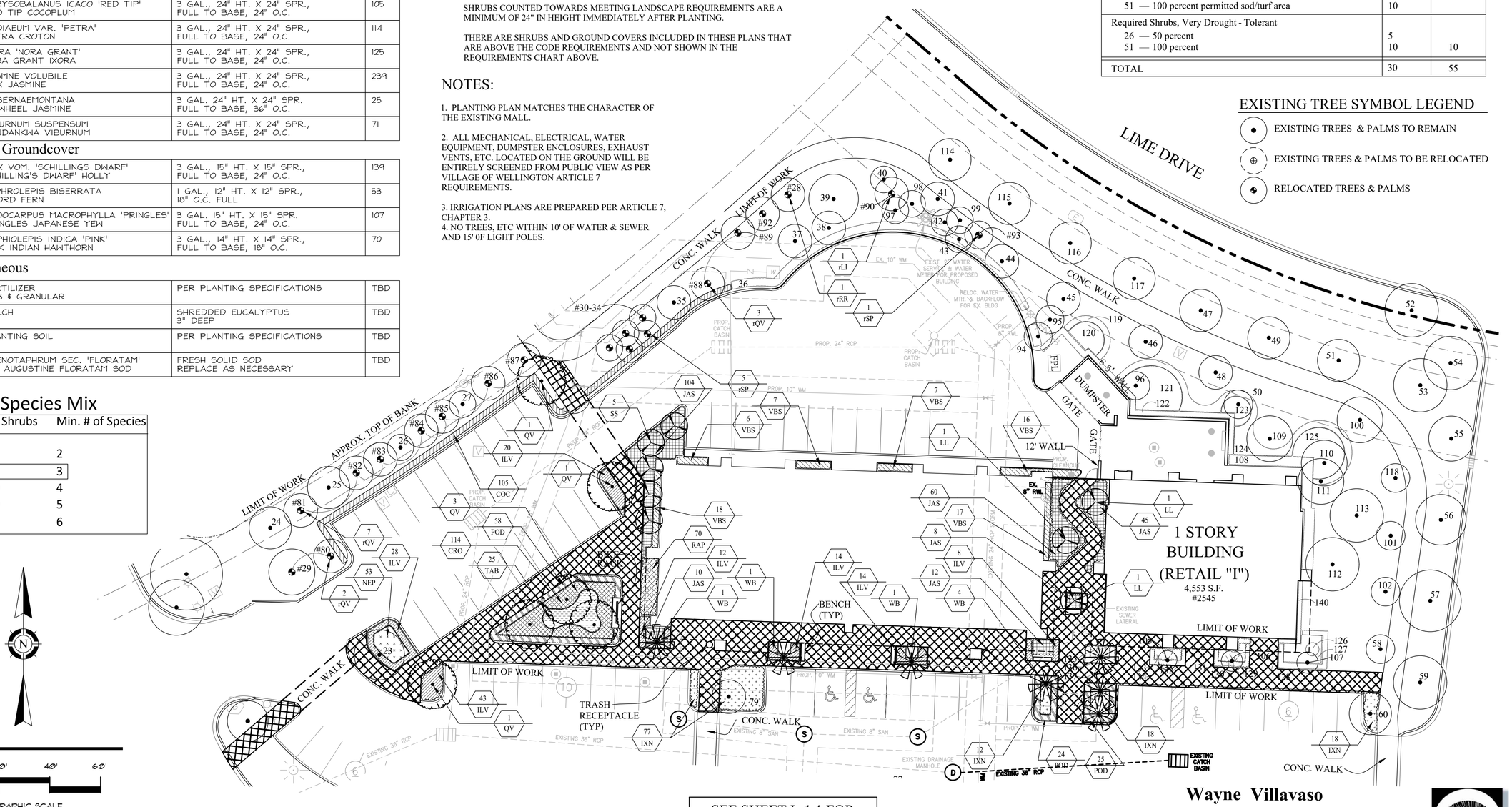

EXISTING TREE SYMBOL LEGEND

- EXISTING TREES & PALMS TO REMAIN
- EXISTING TREES & PALMS TO BE RELOCATED
- RELOCATED TREES & PALMS

WATER CONVERSATION POINT SCALE

Technique/Design Feature	Points	Points
Moisture - Sensing Controller (other than rain switch)	5	5
Drip/Trickle/Micro Irrigation System		
25 — 50 percent of system	5	
51 — 75 percent of system	7	
76 — 100 percent of system	10	
Irrigation Quality Effluent Irrigation		
25 — 50 percent of site	10	
51 — 90 percent of site	20	
91 — 100 Percent of site	30	
Florida Native Landscape		
25 — 50 percent of landscape areas	10	
51 — 90 percent of landscape area	20	20
91 — 100 percent of landscape area	30	
Required Trees, Very Drought - Tolerant		
26 — 50 percent	5	
51 — 100 percent	10	10
Extra Shade Trees, Very Drought - Tolerant		
26 — 50 percent more trees than required	10	10
51 — 100 percent more trees than required	20	
Sod/Turf Area Alternatives		
26 — 50 percent permitted sod/turf area	5	
51 — 100 percent permitted sod/turf area	10	
Required Shrubs, Very Drought - Tolerant		
26 — 50 percent	5	
51 — 100 percent	10	10
TOTAL	30	55

SEE SHEET L-1.1 FOR EXISTING VEGETATION INVENTORY

0 10' 20' 40' 60'
GRAPHIC SCALE

These plans are based on information/drawings by WDA received via e-mail on 4/25/16 & 5/2/16 and civil by HE received via e-mail on 3/25/16.

Wayne Villavaso Landscape Architecture, Inc.
268 Flamingo Drive West Palm Beach, FL 33401
Ph. (561) 820-1566 www.WVLAInc.com
Land Planning /Landscape Architecture FL., N.C., N.Y.

WILLIAMSON DACAR ASSOCIATES
Architecture / Planning / Engineering
ARCHITECTURE / ENGINEERING / PLANNING
1550 LAKE ROBBINS DRIVE, SUITE 106
CLEARWATER, FLORIDA 33760
PH (727) 725-0951 www.williamsondacar.com

Architect: AA 0002541
Landscape Architect: WV 0000694

REGISTERED LANDSCAPE ARCHITECT WAYNE VILLAVASO LA 694 STATE OF FLORIDA

WELLINGTON GREEN PARCEL "F"
PHASE II RETAIL "H" MODIFICATION
PETITION NO. 16-18 (2016-08 ASA 53)
2545 SOUTH STATE ROAD 7
WELLINGTON, FLORIDA 33414

Revisions of Drawings

No.	Date	Revisions

Issues of Drawings

No.	Date	Issues
1	06.15.16	100% CD - PERMIT SET

Phase:
Checked: WEV
Drawn: WEV

Drawing Tittle
PLANTING PLAN

WDA Proj. No.: 1526-01
Owner Proj. No.:
Scale: 1"=20'
Sheet No.
L2.0
No. of Sheets.:

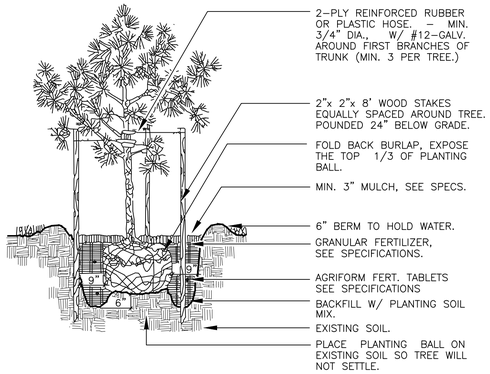

PINE TREE PLANTING DETAIL TYPICAL

NOT TO SCALE

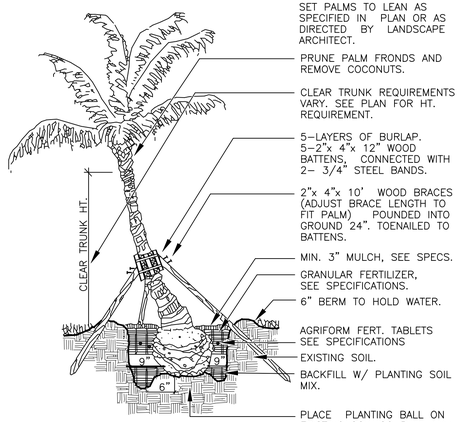

COCONUT PALM PLANTING DETAIL TYPICAL

NOT TO SCALE

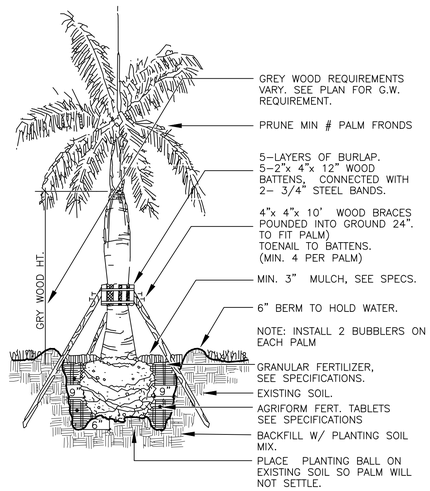

ROYAL PALM PLANTING DETAIL TYPICAL

NOT TO SCALE

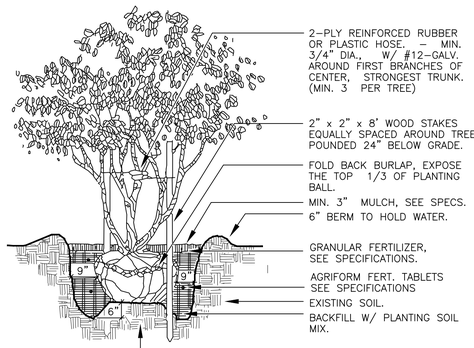

MULTI–TRUNK TREE PLANTING DETAIL

TYPICAL NOT TO SCALE

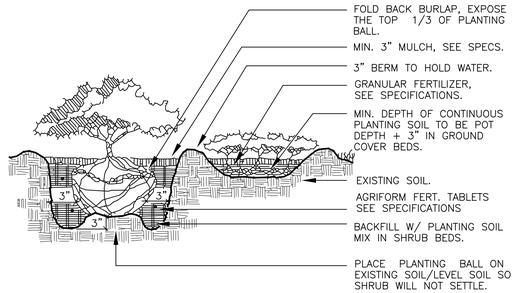

SHRUB & GROUNDCOVER PLANTING DETAIL

TYPICAL NOT TO SCALE

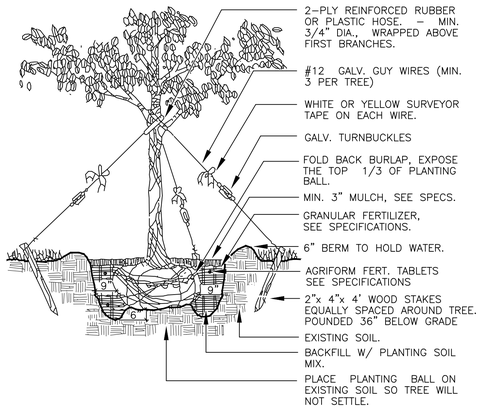

LARGE TREE PLANTING DETAIL TYPICAL

2.5" CAL. TO 4.5" CAL. NOT TO SCALE

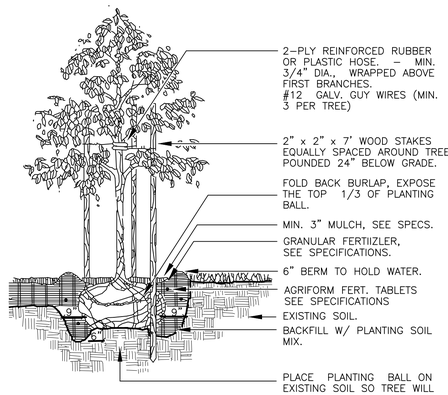

SMALL TREE PLANTING DETAIL TYPICAL

UP TO 2.5" CAL. NOT TO SCALE

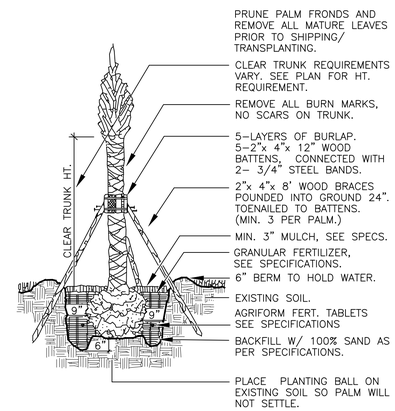

SABAL PALM PLANTING DETAIL TYPICAL

NOT TO SCALE

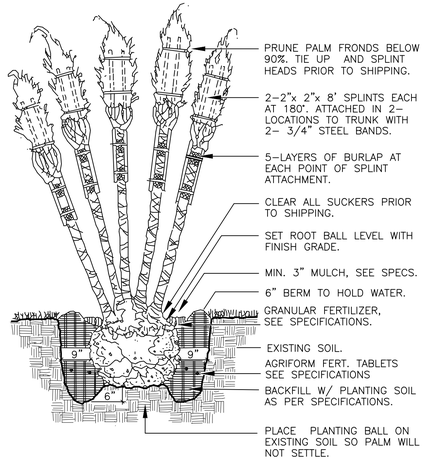

MULTI–TRUNK PALM PLANTING DETAIL

TYPICAL NOT TO SCALE

PLANTING DETAILS

Wayne Villavaso
Landscape Architecture, Inc.

268 Flamingo Drive West Palm Beach, FL 33401
Ph. (561) 820-1566 www.WVLAInc.com
Land Planning /Landscape Architecture FL., N.C., N.Y.

WILLIAMSON DACAR ASSOCIATES
Landscape planning Engineering
ARCHITECTURE / ENGINEERING / PLANNING
1550 LEE ROAD, SUITE 106
CLEARWATER, FLORIDA 33756
PH (727) 725-9951 www.williamsondacar.com

Architect: AA 0002541
Landscape Architect: WV 0000694

REGISTERED LANDSCAPE ARCHITECT WAYNE VILLAVASO LA 694 STATE OF FLORIDA

WELLINGTON GREEN PARCEL "F"
PHASE II RETAIL "H" MODIFICATION
PETITION NO. 16-18 (2016-08 ASA 53)

2545 SOUTH STATE ROAD 7
WELLINGTON, FLORIDA 33414

Revisions of Drawings		
No.	Date	Revisions

Issues of Drawings		
No.	Date	Issues
1	06.15.16	100% CD - PERMIT SET

Phase:
Checked:
Drawn: WEV

Drawing Tittle

PLANTING DETAILS

WDA Proj. No.: 1526–01
Owner Proj. No.:
Scale: 1"=20'

Sheet No.

L3.0

No. of Sheets:

SECTION 02490

LANDSCAPE AND SOD

PART 1 - GENERAL

1.1 DESCRIPTION OF WORK

A. The work includes furnishing all plants, materials, equipment, and labor necessary for the procurement and installation of plant and materials indicated on the drawing(s); and / or in the specifications.

1.2 RELATED SECTIONS

A. Section 02110 - Site Clearing

B. Section 02200 - Earthwork

C. Section 02810 - Exterior Irrigation Work

1.4 QUALITY ASSURANCE

A. The landscape contractor is to be regularly engaged in the installation of living plant material. Labor crews shall be controlled and directed by a landscape foreman well versed in landscape installation, plant materials, reading blueprints and coordination between the job and nursery. The landscape contractor shall carry any necessary insurance and protect the Owner against all liabilities claims or demands for injuries or damage to any person or property growing out of the performance of the work under this contract and all of his workers shall be covered by Workmen's Compensation Insurance.

B. The landscape contractor and irrigation contractor must coordinate scheduling and layout prior to commencement of material installation. If necessary, the landscape contractor and irrigation contractor may agree to minor adjustments in sprinkler layout, head type or quantity, in response to specific plant needs. The landscape architect must be notified 48 hours prior to commencing field changes in order to review and approve of any such changes.

PART 2 - PRODUCTS

2.1 PLANT MATERIAL

A. All plant materials shall be nursery grown unless otherwise noted. Abbreviations on plant list:

C W = clear wood	G = gallon	G W = grey wood
SPR = spread	C T = clear trunk	O A = overall height
O C = on center	HT = height	D = diameter

B. Quality and Size: Plants shall have a habit of growth that is normal for the species and shall be healthy, vigorous and equal or exceed the measurements specified in the plant list, which are the minimum acceptable sizes. Plants shall be measured before pruning with branches in normal position. Any necessary pruning shall be done at the time of planting. Requirements for measurements, branching, grading, quality, balling and burlapping of plants in the plant list generally follow the code of standards currently recommended by the American Association of Nursery Stock. In all cases, plant materials shall be Florida Grade No. 1 or better (as defined by the February, 1998 edition of Grades and Standards). Plants that meet the requirements specified, but do not have normal balance of heights and spread typical for the respective plant, shall not be accepted. All plants shall be free of weeds or any other objectionable vegetation. All trees to have a single main leader, unless specified otherwise.

C. Quantities: All quantities indicated on the plant list are intended as a guide for the bidders and does not relieve the bidder of his responsibility to do a comprehensive plant take off. If a discrepancy occurs between the bidder's take off and the plant list quantity, the Landscape Architect is to be notified for clarification prior to the submittal of bid.

D. Substitution: Plant substitution requests by the Contractor will be considered by the Landscape Architect only upon submittal of conclusive proof that any plant is not obtainable in the type and size specified. The Landscape Architect shall determine the nearest equivalent replacement in an obtainable size and variety. The unit price of the substitute item shall not exceed the bid item replaced, without approval of the Owner.

E. Sabal Palms:

1. Hurricane cut: All Sabal Palms, if designated on plant list to be hurricane cut, shall be dug and have all fronds removed as standard to good horticultural practices, within 24 hours or transporting to site or transplanting on site.

2: Sabal Palms with fronds: All Sabal Palms, if designated on plant list to be installed with fronds, shall have the palm head trimmed up and have a minimum of seven (7) fronds per head. See specification 3.2,E.

2.2 COMMERCIAL FERTILIZER

A. Commercial granular fertilizer shall be from LESCO ph.(561) 848-7122 as follows: 12-2-14 for ornamental trees, palms, shrubs and groundcover. Fertilizer will contain nitrogen, phosphoric acid and potash available plant food by weight. At least 70% percent of the nitrogen in the fertilizer shall be slow-release. Fertilizer shall be delivered to the site unopened in original containers, each bearing the manufacturer's guaranteed analysis. Any fertilizer that becomes caked or otherwise damaged shall not be acceptable. Fertilizer shall be applied at the rate of 3 1/2 to 7 pounds per 1,000 sq. ft. to planting beds. Use a rotary spreader, chest spreader, or hand application method to apply the fertilizer. For new plantings, the fertilizer should be applied to the top of the soil around the plants after planting and before mulch is layed. For trees and larger shrubs, apply one pound of fertilizer per inch of trunk diameter. Spread evenly on the ground around the plant from the outer edge of the leaves inward to the trunk, or 1 to 1 1/2 pounds of fertilizer per 100 sq. ft. of ornamental bed area. Apply the fertilizer to dry foliage and water in soon after application. Wash or brush off walks and painted surfaces following application to avoid discoloration.

B. Planting tablets shall be tightly compressed, long lasting, slow release Agriform fertilizer tablets weighing 21 grams, with a potential acidity of not more than 5% by weight and having an analysis of 20-10-5, respectively.

2.3 PEAT

A. Peat shall be horticultural peat composed of not less than 60% decomposed organic matter by weights, on any oven-dried basin. Peat shall be delivered to the site in a workable condition free from lumps.

2.4 PLANTING SOIL

A. Planting soil shall be 1/3 clean sand, 1/3 peat, 1/3 topsoil (by volume). Planting soil shall be free of clay, stones, plants, roots, and other foreign materials which might be a hindrance to planting operations or be detrimental to good plant growth. Soil shall be delivered in a loose friable condition and applied in accordance with the Planting Specifications.

2.5 MULCH

A. Fibrous Mulch: All mulch material shall be a fibrous, non-floating, shredded Grade 'A' Eucalyptus mulch or as per plant and materials list on plans if listed differently, installed 3" deep (prior to compacting), and moistened at installation to prevent wind dispersement.

B. Mulches shall not contain sticks larger that 1/2 inch in diameter or 3" long, stones, or other foreign material that will prevent the eventual decay of the mulch necessary for its complete effectiveness.

2.6 WATER

A. Water for planting will be available at the site and will be provided by the Owner. Landscape Contractor shall not assume that the irrigation system will be operational at the time of planting. It is the responsibility of the Landscape Contractor to provide all the required water necessary to maintain the plant material in a healthy growing condition. The watering may include deep watering of trees and the watering of shrub and ground cover areas. Any plant materials that die or that are not in a healthy growing condition due to lack of water shall be replaced at no addition cost to the Owner.

B. If water is not available on site, the Landscape Contractor will coordinate with the owner to determine who will provide the water. The Landscape Contractor will apply the water to all planting areas using a water truck. (Note: Landscape Contractor shall comply with all State, County & Municipal codes for traffic safety, etc.) It is the responsibility of the Landscape Contractor to apply all the required water necessary to maintain the plant material in a healthy growing condition. The watering includes deep watering of trees, palms, shrubs, ground covers and sod. Any plant material that die or that are not in a healthy growing condition due to lack of water shall be replaced at no additional cost to Owner. Minimum watering schedule for the first year by watering truck is: three(3) times per week for months 1 & 2, two(2) times per week for month 3 through month 12. NOTE: Contractor is to observe all code restrictions, if applicable, pertaining to watering of new plantings and advise the Owner/Landscape Architect of any concerns for the plant material in advance.

PART 3 - EXECUTION

3.1 PROTECTION OF PLANTS:

A. Root Protection:

1. Balled and Burlapped Plants: Plants designated "B & B" (balled and burlap) shall be dug with firm natural balls of earth of sufficient diameter and depth to encompass to fibrous and feeding root system, necessary for full recovery of plant. Balls shall be firmly wrapped with natural burlap or similar materials and bound with twine, cord, or wire mesh. All collected plants shall be balled and burlap.

2. Container Grown Plants: Plants grown in containers will be accepted as "B & B", providing that all other specified requirements are met. Container grown plants shall meet plant sizes as specified on the plant list and on the Drawings, and shall not be governed by container sizes. Minimum root balls of container grown material shall be no more than 25% less proportionately in size than that stated in "Grades & Standards" for nursery plants. These plants shall have been grown in the container for a maximum of two years prior to installation and shall exhibit a fully developed root system when removed from the container.

B. Protection During Transporting: All plant material shall be protected from possible bark injury on breakage of branches. All plants transported by open trucks shall be adequately covered to prevent windburn, drying, or damage to plants.

C. Protection After Delivery: Plants which cannot be planted immediately on delivery to the site shall be covered with moist soil, mulch, or other protection from drying by wind and/or sun exposure. All plants shall be watered as necessary until planted. Plant storage period shall not exceed forty-eight (48) hours.

D. Protection of Palms (If Applicable): Only a minimum of fronds shall be removed from the crown of the palm trees to facilitate moving and handling, except for "Hurricane Cut" Sabal Palms, if specified.

E. Clear trunk shall be as specified after the minimum of fronds have been removed. Clear trunk shall be measured from the top of root ball to where the mature trunk joins the immature or green portions of the trunk. All palms shall have a sufficient ball size for rapid growth and acclimation. All palm trunks shall straight and true unless otherwise specified, and be free of damage and scars. Sabal Palms shall have no burn marks on trunks. Sabal Palm designated to have fronds at installation shall be tied with a biodegradable twine to be left in place until the tree is well established at which time the Contractor is to remove the twine if necessary.

F. Protection During Planting: Trees and palms moved by chain, strap, winch, or crane shall be thoroughly protected from chain marks, girdling or bark slippage by means of burlap, wood battens or other approved methods. Trees and palms with damaged or girdled trunks will be rejected and will be replaced as per specified prior to final acceptance by the Owner/Landscape Architect.

3.2 PLANTING OPERATIONS

A. Layout: Location for plants and outline of areas to be planted are indicated on the Drawings. All plant locations shall be staked in the field by the Contractor, to the satisfaction of the Landscape Architect. Where construction or utilities below ground or overhead are encountered, or where changes have been made in the construction, necessary adjustments will be approved by the Landscape Architect.

B. Soil Preparation: Apply two (2) applications of an approved pre-planting environmentally safe systemic herbicide. Soil used shall be as herein before specified under "Planting Soil", thoroughly mixed with peat to produce 33 % peat by volume. The soil should be in a relatively dry state and mixed thoroughly by hand or rotary mixer. All planting areas shall be treated with an approved pre-emergent environmentally safe herbicide, according to the manufacturer's specifications. All chemicals used are subject to safe environmental applications based on industry standards by licensed professionals using all safety precautions recommended.

C. Excavation for Planting: Excavation of plant pits shall be circular in outline and shall extend to the required subgrades as specified hereunder. The minimum depth of plant pits specified below shall be measured from the finish grade. Mass planting beds shall be stripped of all vegetation prior to planting. Use acceptable excess excavated topsoil to form 6" height 3' diameter watering berms around plants; use 25% of the excavated material and mix with topsoil for Backfill. Remove all excess material to dump site as directed by Owner. If an on site dump area has not been designated by the Owner, remove excess material off-site. Excavated material in excess of the 6" temporary water berm above is not to mounded around the base of each plant. The 6" water berm material is to be removed from site and the resulting area is to be mulched/sodded as required after the transplant acclimation period is complete to form a 3' diameter circular mulch ring centered around the base of the plant.

D. Balled and Burlapped Plants: After final pit preparation, loosen burlap wrapping and fold burlap down exposing the top 1/3 of the root ball, leaving the ball unbroken. Remove excessive amount of burlap to eliminate voids which may be caused upon decomposition. Remove all twine, rope, wire, etc., at the base of trunk upon installation to prevent the choking or girdling of the root system as the plant matures.

E. Container Grown Plants: Container grown plants shall, when delivered, have sufficient growth to hold earth intact when removed from container and shall not be root bound. Plant pits for container materials shall be formed flat on the bottom and compacted to avoid air pockets at the bottom of root balls and container shall be removed carefully to prevent damage to plant or root system. Plants with circular root systems will not be accepted and will be replaced by Contractor prior to final acceptance.

F. Testing for Drainage: Test fill all tree pits with water before planting to assure proper drainage percolation is available. Pits which are found not to be adequately draining shall be excavated to a depth sufficient for drainage and backfilling with gravel or crushed rock. No allowances will be made for lost plants due to improper drainage.

G. Pit Sizes: Minimum diameter (width) and depth of planting pits for balled and burlapped, and container grown plants, shall be as follows:

1. Diameter - Trees & Palms: 18"-24" greater than diameter of ball or spread of roots.

2. Diameter - Shrubs: 8"-12" greater than diameter of ball or spread of roots.

3. Depth - Trees and Palms: The center of each pit shall be dug to the depth of the root ball. The root ball shall sit tilled to existing subgrade.* The perimeter of each pit shall be 6" greater than depth of ball to provide 6" of planting soil backfill to enhance downward growth of roots. Also see 3.2 I & 3.2 J.

* (If subgrade soils at the bottom of each pit are detrimental to plant growth, each pit is to be dug 6" deeper than root balls and the root ball is to sit on 6" of properly compacted specified planting soil mix to prevent settling.)

4. Depth - Shrubs: The center of each pit shall be dug to the depth of the root ball. The root ball shall sit on tilled existing subgrade.* The perimeter of each pit shall be 4" greater in depth than the root ball to provide 4" of planting soil backfill to enhance downward root growth.* Also see 4.1.

5. Depth - Vine Ground covers: Pits shall conform to accepted nursery practice for the particular species and equal the plant pot depth plus three (3) inches.

H. Backfilling: When the plant pit has been excavated as specified above and the plant has been set, the pit shall be backfilled with planting soil at the following minimum rates:

One-quarter cubic yard per one (1) tree
One cubic yard per twenty-five (25) - 7G (lerio cans / equal)
One cubic yard per fifty (50) - 3G shrubs
One cubic yard per one hundred (100) - 1G (ground covers, etc.)

I. Setting Trees and Shrubs: Unless otherwise specified, all trees and shrubs shall be planted in pits, centered, and set on existing tilled subgrade soil* to such depths that the finished grade level of the plant shall be the same as that at which the plant was grown. They shall be planted upright and faced to give the best appearance or relationship to adjacent structures. No burlap shall be pulled out from under the balls and the burlap shall be folded down to expose the top 1/3 of ball. Platforms, wire, and surplus binding from top and sides of the balls, shall be removed. All broken or frayed roots shall be cut off cleanly. Planting Soil mix (1/3 clean sand, 1/3 peat, 1/3 topsoil) shall be placed and compacted thoroughly, avoiding injury and shall be settled by watering. No filling around trunks will be permitted. After the ground settles, additional soil shall be filled in the level of the finished grade allowing for three inches (3") of mulch after the granular fertilizer has been applied. All air pockets will be removed by alternately watering and adding soil as required. Form a shallow saucer around each plant by placing a berm of soil along the edge of the plant pit. This berm shall be six inches (6") high for all trees and three inches (3") high for all shrubs.

J. Setting Palms: All palms shall be planted in pits, centered, and set on existing tilled subgrade soil* to such depths that the finished grade level of the palm is the same as it was grown. They shall be planted upright (unless specified to lean), and faced to give the best appearance or relationship to adjacent structures or views. All broken or frayed roots shall be cut off cleanly. Except for Sabal Palms which are to be backfilled with sand, thoroughly washed in during planting operations, all palms shall be backfilled with planting soil mix of 1/3 clean sand, 1/3 peat, 1/3 topsoil, placed and compacted thoroughly, avoiding injury and shall be settled by watering. After settling, additional planting soil shall be used to fill in to finished grade allowing three inches (3") for mulch to be applied after granular fertilizer has been applied. A shallow saucer shall be formed around each palm by placing a berm of soil along the edge of each planting pit. This berm is to be a minimum of six (6") inches high.

K. Fertilizing: When setting trees, palms and shrubs placed in each plant hole with Agriform Planting Tablets, 20-10-5 formula, 21 gram, according to the following:

Tablets application:
1 gallon container plant ....1 tablet
2 - 3 gallon container plant ....2 tablets
7 -15 gallon container plant.................................4 tablets
B & B Shrubs and Trees.....................................1 tablet for every 20" around circumference of root ball above middle of ball.

Granular application: Application of granular fertilizer by LESCO will be as per LESCO application rate specifications.

Correct Placement of Tablets: Position the plant in the hole and backfill no higher than halfway up the root ball. Place the recommended number of tablets evenly spaced around the perimeter of, and immediately adjacent to, the root ball at the depth which is between the middle and the bottom of the root ball. Complete backfilling as described above under setting trees, palms and shrubs.

L. Pruning: Remove dead and broken branches from all plant material. Prune to retain typical growth habit of individual species with as much height and spread as is practical. Make all pruning cuts with a sharp instrument flush with trunk or adjacent branch, in such a manner as to ensure elimination of stubs. "Head back" cuts, right angle to line of growth, will not be permitted and trees will not be poled or topped. Paint all cuts 1/2" in diameter and larger with approved waterproof antiseptic tree paint and remove trimmings from site. Trees and palms incorrectly pruned will be rejected.

M. Guying and Staking:

1. Guy all large trees 1" to 4 1/2" in caliper in three (3) directions with double strands of No. 12 galvanized wire attached to approved wood braces equally spaced and driven below grade per details. When securing wires to trees, cover all wires which may come in contact with any part of tree with new 2-ply reinforced rubber or plastic hose of 3/4" in diameter or greater. Place guys not less than 1/3 of the heights of tree above finished grade and above first substantial branches. All hoses shall be interlocked around tree trunk. Place anchors so that guys are equally spaced.

2. Guy all SMALL TREES (less then 2 1/2" in caliper) as indicated above and stake with three (3) - 2" x 2" x 7' wood braces, equally spaced, 18" to 24" from trunk, pounded 24" below grade.

3. Guy all MEDIUM TREES (2 1/2" to 4 1/2" in caliper) as addressed above and stake with 3-2" x 4" x 8' wood braces, equally spaced around tree, pounded 36" below grade. Each guy wire shall angle from tree at a 45' angles to horizontal. Keep guys tight until project completion by the use of a galv. steel turnbuckle placed midway between trunk and ground. Each wire shall have a yellow or white surveyor's tape located just above the turnbuckle. Each wood braced to have a 1/2" notch and the guy wire wrapped around the brace 3 times at the notch to prevent slipping.

N. In staking palms and large broadleaf trees (4 3/4" caliper and up) no nails or other fasteners will directly penetrate the trunks. Wood 2 x 4 battens, 12 inches (12") long, separated by a minimum of five (5) layers of burlap can be attached to the trunk of the palms/trees with metal banding. Stakes can only be nailed to the wooden battens. Stakes are to be sized according to to the size, weight, and exposure of the tree/palm with a minimum of 2 x 4's up to 6 x 6's or greater members as required. Stakes are to be removed by the Contractor when appropriate after maintenance period is complete subject species, root formation, and the Contractor's acceptance of the stability of tree/palm. All trees and palms which lean or fall during the guarantee period will be straightened and properly reset at no charge to the Owner.

O. Mulching: All trees and shrub beds shall be mulched immediately after planting, to a three inch (3") depth, with the mulch as specied in the plant and materials list or as per these specifications. Prevent wind displacement of mulch by thoroughly wetting the mulch down.

P. Excess Excavated Soil: Excess excavated soil shall be disposed of off site by the Contractor at no additional expense to the Owner. If the excavated soil is clean and free of debris, it may be used for other on site earthwork if needed, unless specified otherwise. See 2.B.

3.3 SOD and SEED (When Applicable)

A. Soil: The Contractor shall submit a unit price per cubic yard for the supply and distribution of planting soil as herein before specified, to be applied at a compacted depth of one inch (1") to all areas receiving sod. (The use of this item in the Contract shall be at the discretion of the Landscape Architect after evaluation of the existing soil on the site.) Payment for this item will be determined by a square foot in place measurement of the installed sod area after sod installation is complete, multiplied by the specified depth of one inch (1"), to determine cubic yards of soil used.

B. Grades: It shall be the responsibility of the Contractor to finish (fine) grade all landscape areas, eliminating all bumps, depressions, sticks, stones and other debris to the satisfaction of the Landscape Architect, prior to the application of sod. If supplemental topsoil is to be spread, no sod shall be laid until the depth of this soil has been approved.

C. The sod shall be as called for on the Landscape Drawings. Sod shall be of firm tough texture having a compact growth of grass with good root development, and shall contain only the species of grasses specified, and no weeds or any other objectionable vegetation. The soil embedded in the sod shall be 2" of good earth, free from stones and debris and all sod shall be free from fungus, vermin and other diseases.

D. Before being cut and lifted, the sod shall have been mowed at least three times with a lawn mover, with the final mowing not more than seven (7) days before the sod is cut. The sod shall be carefully cut into uniform dimensions.

E. Solid sod shall be laid by the Contractor with closely abutting joints with a tamped or rolled, even surface. It shall be the responsibility of the Contractor to bring the sod edge in a neat, clean manner in straight lines or smooth radii as per plans to the edge of all paving, buildings, trees, palms, shrubs, etc. and bed areas or mulch rings. Sod installation, if subcontracted, is to be supervised by the Contractor to insure proper laying and proper bed lines per plans. Improper sod installations will be removed and relaid as necessary. Sod is to be "cut-in" to match the elevation of adjacent areas to develop a finished appearance and to avoid unevenness or tripping hazards. If, in the opinion of the Landscape Architect, top-dressing is necessary after rolling, clean sand will be evenly applied over the entire surface and thoroughly washed in at no additional cost to the Owner.

F. Seed (if applicable)

1. Landscape Contractor shall remove all rocks larger than one inch (1") in dia. and all vegetation from the areas to be seeded, scarify the area, then apply 10-10-10 fertilizer at a rate of 500 lbs. per acre.

2. Application: Argentine Bahia grass seed shall be applied at a rate of 80 lbs. per acre, mixed with common Hulled Bermuda Seed - 20 lbs. per acre, and 30 lbs. per acre of suitable cover crop (millet seed or winter rye seed) depending upon the season of installation.

3. Roll immediately after seeding with a minimum 500-pound roller avoiding damage to site utilities and improvements by surveying and marking them as necessary. Then apply straw mulch at a rate of 2.5 tons per acre.

4. Apply approved fertilizer at the rate of 150 pounds per acre, 45 days after seeding.

3.4 CLEAN UP

A. Any soil, peat or similar material which has been brought onto any paved areas shall be removed promptly keeping these areas clean as the work progresses. Upon completion of the planting, all excess soil, stones and debris which has not been previously cleaned up shall be removed from the site.

3.5 MAINTENANCE

A. Maintenance shall begin immediately after each plant is planted and shall continue during installation and until all planting has passed final inspection and acceptance. Maintenance shall include watering, weeding, cultivating, removal of dead materials, resetting plants to proper grades or upright positions and restoration of the planting sauces and any other necessary operations. Proper protection to lawn areas shall be provided and any damage resulting from planting operations shall be repaired promptly.

B. All trees shall be deep watered for a period of 90 days after planting. Saucer berms shall be removed on all plant material 30 days after acceptance, except for all replacement materials.

C. In the event of the threat of serious damage resulting from insects or disease prior to final acceptance, the plants shall be treated by preventative or remedial measures approved for good horticultural practice at no additional cost to the Owner.

D. The Contractor shall furnish the Owner with a written and detailed description for the care and maintenance of all plant material at the time of final inspection. The Owner agrees to execute the instructions for such care and maintenance.

3.6 INSPECTION AND ACCEPTANCE

A. Inspection: Inspection of work to determine completion of contract, exclusive of the possible replacement of plants, will be made by the Owner and/or Landscape Architect at the conclusion of all planting and at the written request of the Contractor.

B. Acceptance: After inspection, the Contractor will be notified by the Owner and/or Landscape Architect of the acceptance of all plant material and workmanship, exclusive of the possible replacement of plants subject to guarantee.

3.7 GUARANTEE AND REPLACEMENT

A. Guarantee: The Contractor, as part of this Contract, shall furnish a written guarantee warranting all materials, workmanship and plant materials, except sod, for a period of one (1) year from the time of completion and acceptance. All plant materials shall be alive and in satisfactory condition and growth for each specific kind of plant at the end of the guarantee period. Where vandalism is agreed by the Landscape Architect as the cause for replacement, the Contractor shall not be responsible for replacement during the one (1) year guarantee after final acceptance.

B. Sod shall be guaranteed for a two month period dating from final acceptance and any lawn care which becomes necessary during the completion period will be the responsibility of the Owner to ensure a vigorous stand of grass.

3.8 TREE PROTECTION (When Applicable)

A. Protection and care of existing trees, palms, shrubs, and ground cover to remain, to include all aspects of protection, fertilization and watering.

B. Tree, palms, shrubs, and ground cover to remain are designated on the drawings or as directed by the Landscape Architect.

C. Snow fence detail, when included in plans, will be installed prior to beginning construction activity on project site as part of base bid for contract.

3.9 TREE RELOCATION (When Applicable)

A. Prepare and relocate trees and palms designated for relocation to include all aspects of preparation, protection, fertilization and watering.

1. Trees and palms to be relocated on site are designated on the drawings or as directed by the Landscape Architect.

2. Diameter used herein shall mean diameter measured at breast high (DBH) of dicot or a conifer tree as measured four and one half feet (4 1/2) above ground. The diameter of a monocot is measured at one foot (1') above ground.

3. All dicot trees, specifically Quercus Virginiana (Native Florida Live Oaks), shall be root pruned between 90-120 days before being relocated.

4. All monocot trees shall be dug with a vermeer or similar type tree spade equipment and moved to its permanent location in one move. Monocots shall be watered before the move, installed with a complete watering system and maintained under full irrigation for a period adequate to establish the tree.

5. Plans are not complete for bid or construction unless accompanied by written letter/plan format C.S.I landscape specifications.

B. Tree Preparation

1. Excavate the total circumference of the root zone with a minimum eighty (80") inch diameter ball, cut to a depth of not less than thirty (30") depth and one foot wide, to get all roots that are necessary to the support of the tree in relocation. The cut trench shall be backfilled with loose friable soil (1/3, 1/3, 1/3 mix) - and Eucalytus mulch (unless otherwise specified in plant and materials list on plans) and should be placed under constant watering until the time of the move. The tree shall be watered before the move, installed with a complete watering system and maintained under full irrigation for a sufficient period of time adequate to establish the tree.

2. At the time of root pruning, the oak trees shall also have their canopies selectively trimmed out to form a well shaped tree with a broad spread and a high canopy. Thin out all interior branches and cut the perimeter branches back to the (1") one inch diameter limb size. The intent is to reduce the foliar mass but keep plenty of small limbs and branches so that the new growth will emerge in the spring that the root system can support. Cut no limbs larger than 1" diameter except interior branches to be removed.

3. Six months after the tree is established in its new location, remove stakes, bands, and battons unless they are still needed for bracing tree.

4. Coordinate the orientation of trees before they are set and as they are being set to avoid conflict with branch structure of trees adjacent to either the other trees, the building walls and any other overhead or underground utilities.

5. Excavate holes in scale with root ball of tree as it is dug so tree will be set to grow at the same grade as it was originally growing.

C. Watering

1. This contract includes the responsibility to provide a constant supply of water to the tree to be relocated, from the day they are root pruned, throughout the holding period, to the new locations when they are moved, and for the final locations shown on plans. Coordinate with the irrigation installer and the Contractor to utilize the existing water source(s) and the new irrigation water meter(s), so no period of the time occurs that water is not always available to the trees to avoid stress or loss of trees.

2. While hand watering, keep all upper branches moistened. Continue any selective pruning that may be needed to adjust to the new planting locations.

3. Maintain supplementary hand watering throughout all phases of construction.

4. Form and maintain tree well for water retention in the root zone.

D. Staking

1. Brace with 2 x 4, 4 x 4, or 6 x 6 wooden stakes depending on the tree size or at the landscape contractor's discretion after root pruning in place and after tree relocation. The landscape contractor is fully responsible to reset trees at no additional cost if required. All work, care, and follow up is to be included in base bid.

2. Burlap, battons and bands shall be used to protect bark from damage while rigging to lift trees by crane. No nails in trees.

E. Utilities

1. The installing contractor shall be responsible to coordinate with all construction plans and schedules, and all appropriate utility location service companies in the project area and the local agencies to provide locations for all overhead and underground utilities.

F. Mulching

1. The installing contractor shall be responsible to coordinate with all construction plans and provide mulch to minimum 3" depth and incorporate the tree(s) with the rest of the new plantings.

2. Root hormones, fungicide and similar chemicals may be applied at the contractor's discretion.

G. Soil

1. Backfill the trees with a 1/3, 1/3, 1/3 mix of planting soil. Construct a tree well unless curbing or planter areas provide necessary well requirements.

H. Fertilization

1. Fertilize tree with agriform tablets outside the root zone to encourage root growth.

I. Guarantee

1. Equivalent replacement. A tree (or trees) which due to its classification (based on the table of tree evaluation established by the International Society of Arboriculture) in the case of dicot or conifer condition size, and location, its determined by the city/county/state Landscape Architect/Urban Forester to be the equivalent to the tree (or trees) which it replaces. In making this determination, the city/county/state Landscape Architect/Urban Forester shall be guided by the standards established by the International Society of Arboriculture.
2. Equivalent value is an amount of money, which reflects the cost of replacing a dicot or conifer tree, determined by multiplying the cross sectional diameter of the tree (measured in square inches) by the values (based on the cost of obtaining an equivalent replacement according to the classifications of tree as listed in the table of tree evaluation established by the International Society of Arboriculture.
3. Any tree or palm that dies or is deemed in unacceptable condition for one (1) year following relocation shall be removed by the Contractor including root ball, and backfilling of pit, at no cost to the Owner and the tree will be replaced with a new tree or palm of the same size and species, and installed to meet these specifications.
4. Acknowledging the nature of tree and palm relocation, the Contractor shall not be responsible for survival of trees and palms if it is deemed by the Landscape Architect or Owner that all possible measures have been taken by the Contractor to insure the tree(s) survivability. If, however, it is deemed by the Landscape Architect or Owner that the tree or palm mortality is a product of negligence by the Contractor or failure to follow these specifications, the Contractor shall provide and install at no additional cost to the Owner a tree or palm of same size and species.

END OF SECTION 02490

Wayne Villavaso
Landscape Architecture, Inc.

268 Flamingo Drive West Palm Beach, FL 33401
Ph. (561) 820-1566 www.WVLAInc.com
Land Planning /Landscape Architecture FL., N.C., N.Y.

PLANTING SPECIFICATIONS

WILLIAMSON DACAR ASSOCIATES© INCORPORATED
Architecture Planning Engineering
ARCHITECTURE / ENGINEERING / PLANNING
15500 LIGHTWAVE DRIVE SUITE 106
CLEARWATER, FL. 33760
PH (727) 725-0951 www.williamsondacar.com

Architect: AA 0002541
Landscape Architect: WV 0000694

REGISTERED LANDSCAPE ARCHITECT
WAYNE VILLAVASO
LA 694
STATE OF FLORIDA

WELLINGTON GREEN PARCEL "F"
PHASE II RETAIL "H" MODIFICATION
PETITION NO. 16-18 (2016-08 ASA 53)

2545 SOUTH STATE ROAD 7
WELLINGTON, FLORIDA 33414

Revisions of Drawings

No.	Date	Revisions

Issues of Drawings

No.	Date	Issues
1	06.15.16	100% CD - PERMIT SET

Phase:
Checked:
Drawn: WEV
Drawing Tiltle

PLANTING SPECIFICATIONS

WDA Proj. No.: 1526-01
Owner Proj. No.:
Scale: 1"=20'
Sheet No.

L4.0

No. of Sheets.:

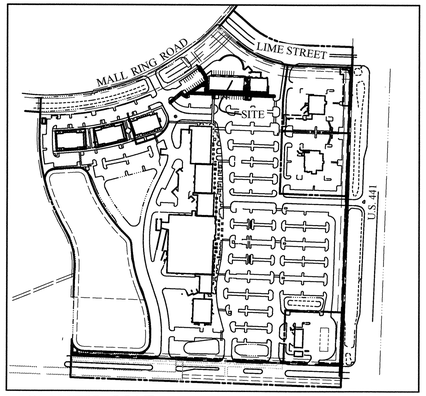

VICINITY MAP

SCALE: 1"=300'

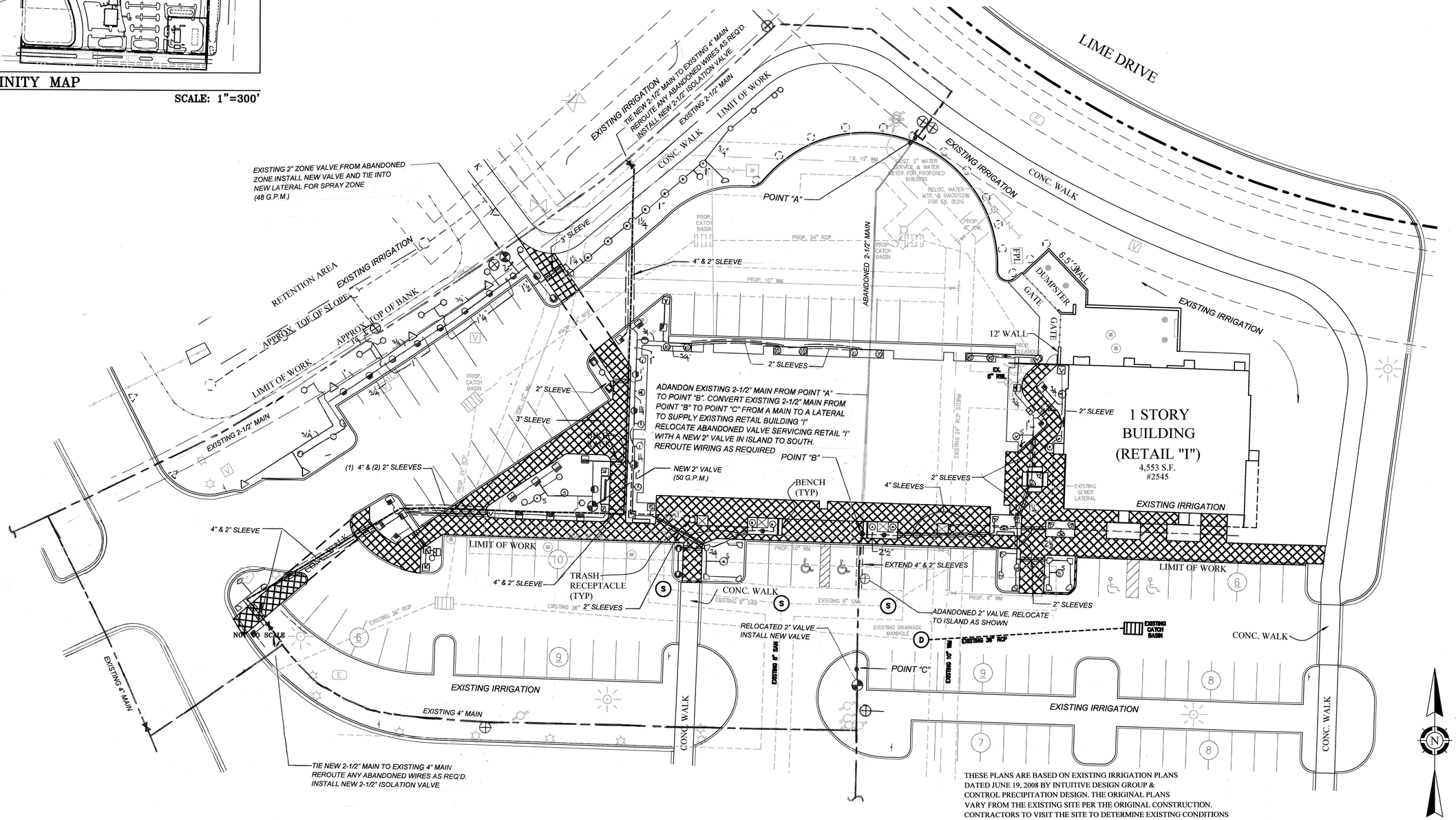

THESE PLANS ARE BASED ON EXISTING IRRIGATION PLANS DATED JUNE 19, 2008 BY INTUITIVE DESIGN GROUP & CONTROL PRECIPITATION DESIGN. THE ORIGINAL PLANS VARY FROM THE EXISTING SITE PER THE ORIGINAL CONSTRUCTION. CONTRACTORS TO VISIT THE SITE TO DETERMINE EXISTING CONDITIONS AND VERIFY THE ABILITY TO INSTALL THE NEW IRRIGATION PRIOR TO BIDDING.

0 10' 20' 40' 60'

GRAPHIC SCALE

Wayne Villavaso
Landscape Architecture, Inc.
268 Flamingo Drive West Palm Beach, FL 33401
Ph. (561) 820-1566 www.WVLAInc.com
Land Planning /Landscape Architecture FL., N.C., N.Y.

These plans are based on information/drawings by WDA received via e-mail on 4/25/16 & 5/2/16 and civil by HE received via e-mail on 3/25/16.

WILLIAMSON DACAR ASSOCIATES
Architecture Planning Engineering
ARCHITECTURE / ENGINEERING / PLANNING
15500 LIGHTWAVE DRIVE SUITE 106
CLEARWATER, FL. 33760
PH (727) 725-0951 www.williamsondacar.com

Architect: AA 0002541
Landscape Architect: WV 0000694

REGISTERED LANDSCAPE ARCHITECT
WAYNE VILLAVASO
LA 694
STATE OF FLORIDA

WELLINGTON GREEN PARCEL "F"
PHASE II RETAIL "H" MODIFICATION
PETITION NO. 16-18 (2016-08 ASA 53)
2545 SOUTH STATE ROAD 7
WELLINGTON, FLORIDA 33414

Revisions of Drawings

No.	Date	Revisions

Issues of Drawings

No.	Date	Issues
1	06.15.16	100% CD-PERMIT SET

Phase:
Checked: WEV
Drawn: WEV
Drawing Title
IRRIGATION PLAN
WDA Proj. No.: 1526-01
Owner Proj. No.:
Scale: 1"=20'
Sheet No.
L5.0
No. of Sheets.:

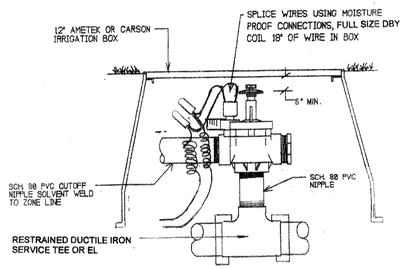

ZONE VALVE DETAIL
IRRITROL 100 OR TORO P-220

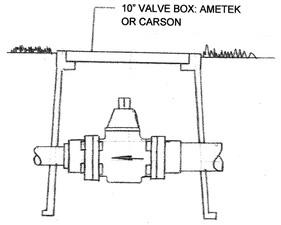

MAINLINE ISOLATION VALVE
FLANGED IRON BODY NON RISING STEM

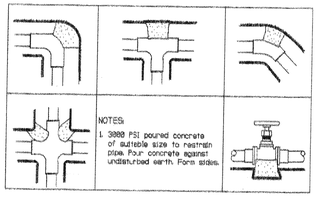

THRUST BLOCKS
WHERE REQ'D PER PLAN

LEGEND

1. MPR PLUS NOZZLE (SIZE PER PLAN)
2. APPROVED BACKFILL
3. 6"/12" POP UP SPRAY
4. LATERAL PIPE
5. LATERAL TEE
6. FUNNY PIPE & FITTINGS

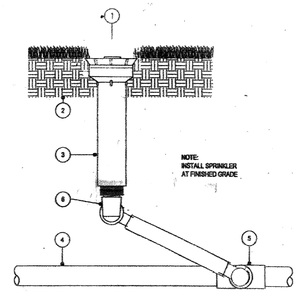

POP UP SPRAY OR ROTOR

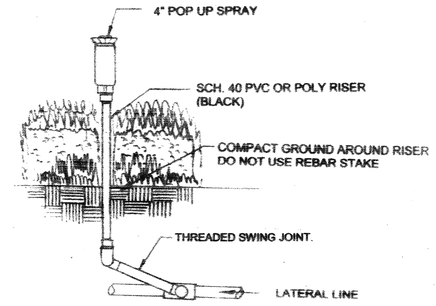

SHRUB RISER SPRAY

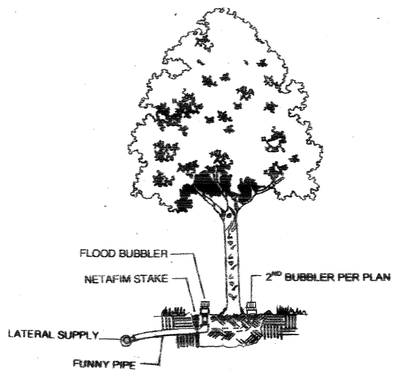

FLOOD BUBBLER
QUANTITY PER TREE PER PLAN

NOTES:

GENERAL:
THIS IS A MODIFICATION OF AN EXISTING SYSTEM. CONTRACTORS SHALL FAMILIARIZE THEMSELVES WITH THE EXISTING SYSTEM. ORIGINAL IRRIGATION PLANS SHOULD BE OBTAINED FROM THE DEVELOPER AND REFERENCED AGAINST THIS PLAN

PIPING:
MAINLINE: CLASS 200 PVC "O" RING WITH MEG-A-LUG FITTINGS X 24" DEEP..
ZONELINES: CLASS 200 & 160 X 12" DEEP, MIN.

SLEEVES: SCH. 40 PVC AS NOTED (24" DEEP UNDER PAVEMENT)

FITTINGS:
DUCTILE IRON MEG-A-LUG FOR MAINLINES. INSTALL JOINT RESTRAINTS FOR 3 PIPE LENGTHS FROM ALL CHANGES IN DIRECTION OF MAIN. IF A SOLVENT WELD FITTING IS REQUIRED WHERE A MEG-A-LUG CANNOT BE INSTALLED IT SHALL BE SCH. 80 PVC W/ CONCRETE THRUST BLOCK SCH. 40 PVC FOR LATERAL LINES
FABRICATE WITH SQUARE CUT, DEBURRED AND FULLY ENGAGED JOINTS.
USE PURPLE CLEANER & GREY MEDIUM BODY CEMENT.

CONTROL WIRING:
SINGLE STRAND SOLID COPPER IRRIGATION WIRE SIZED AND COLORED TO MATCH EXISTING WIRING CONTRACTOR TO LOCATE EXISTING WIRING AND ROUTE AS REQUIRED FOR THE NEW VALVES. RUN ANY SPARES TO MATCH EXISTING WIRING. USE FULL SIZE MOISTURE PROOF CONNECTORS FOR ALL SPLICES.
SPLICE ONLY IN VALVE OR A PULL BOX.. LEAVE 24" OF COILED WIRE AT ALL CONNECTIONS. DO NOT USE MULTI STRAND WIRE. LABEL ALL WIRES AND SPLICES ON THE "AS INSTALLED"

BACKFILL ALL TRENCHES FREE OF DEBRIS. COMPACT TRENCHES TO ORIGINAL DENSITY. FLUSH ALL LINES. USE PROPER SCREENS IN ALL HEADS. ADJUST ALL HEADS AND SYSTEM FOR COMPLETE COVERAGE AVOIDING WATER ON WALLS, WALKS, ROADWAY, ETC..

PRESSURE TEST MAIN AT FULL PUMP SHUT OFF PRESSURE FOR 2 HOURS. OBSERVE ANY LEAKAGE AND REPAIR AS NECESSARY.

CONTRACTOR TO VERIFY ALL UNDERGROUND UTILITIES AS REQUIRED BY FLORIDA LAW.

INSTALLATION SHALL COMPLYTO THE FLORIDA BUILDING CODE, APPENDIX "F" AND LOCAL CODES AND REGULATIONS.

PROVIDE OWNER WITH AN ACCURATE "AS INSTALLED" PLAN AT COMPLETION SHOWING THE LOCATION OF NEW MAINS AND WIRING, MECHANICAL AND ELECTRICAL CONNECTIONS AND CAPPED OFF LINES. PROVIDE ALL LOCATIONS USING DIMENSIONS FROM 2 FIXED DATUMS

SYMBOLS – LEGENDS

- EXISTING 2-1/2" MAIN TO REMAIN
- EXISTING 4" MAIN TO REMAIN
- NEW 2-1/2" MAIN
- ABANDONED 2-1/2" MAIN
- NEW SLEEVES: SCH. 40 PVC AS NOTED
- NEW 2" ZONE VALVES PER DETAIL
- EXISTING 2" ZONE VALVES TO REMAIN
- NEW 2-1/2" ISOLATION VALVES PER DETAIL

SPRINKLER HEAD LEGEND

SYM.	TYPE	MODEL	QTY.
△	POP UP ROTORS	RAINBIRD #5006-PC-3.0	5
	6" POP UP SPRAYS	RAINBIRD #1806-NOZZLE BELOW	67
		-12'H	
		-12'T	
		-12'Q	
		-10'VAN	
		-10'F	
		-10'H	
		-10'Q	
		-5'H	
		-5'Q	
		-15'SST	
		-15'EST	
		-5'CST-B	
		-5'QB	
		-1402/ PA80	
	12" POP UP SPRAYS	RAINBIRD #1812-NOZZLE BELOW	31
		-12'VAN	
		-12'H	
		-12'T	
		-12'Q	
		-10'H	
		-10'T	
		-10'Q	
		-5'Q	
		-15'SST	
		-15'EST	
	SHRUB SPRAYS	RAINBIRD #1804-NOZZLE BELOW	13
		-12'F	
		-12'VAN	
		-12'H	
		-10'F	
		-10'H	
		-8'VAN	
		-15'SST	
		-15'EST	
	TREE BUBBLERS	RAINBIRD #1300AF	16

NOTES: USE PROPER SCREENS IN ALL HEADS.
IF EXISTING SPRINKLERS ARE TORO OR HUNTER THE COORESPONDING MODEL MAY BE SUBSTIUTED TO MATCH.

Wayne Villavaso
Landscape Architecture, Inc.
268 Flamingo Drive West Palm Beach, FL 33401
Ph. (561) 820-1566 www.WVLAInc.com
Land Planning /Landscape Architecture FL., N.C., N.Y.

WILLIAMSON ACARA ASSOCIATES
ARCHITECTURE / ENGINEERING / PLANNING
13500 LAKEWAVE DRIVE, SUITE 106
LAKE WORTH, FL 33467
PH (727) 723-0951 www.williamsonacara.com
Architect: AA 0002541
Landscape Architect: WV 0000694

REGISTERED LANDSCAPE ARCHITECT WAYNE VILLAVASO LA 694 STATE OF FLORIDA

WELLINGTON GREEN PARCEL "F"
PHASE II RETAIL "H" MODIFICATION
PETITION NO. 16-18 (2016-08 ASA 53)
2546 SOUTH STATE ROAD 7
WELLINGTON, FLORIDA 33414

Revisions of Drawings		
No.	Date	Revisions

Issues of Drawings		
No.	Date	Issues
1	06.15.16	100% CD-PERMIT SET

Phase:
Checked:
Drawn: WEV
Drawing Title

IRRIGATION DETAILS

WDA Proj. No.: 1526-01
Owner Proj. No.:
Scale: 1"=20'
Sheet No.

L6.0

No. of Sheets.:

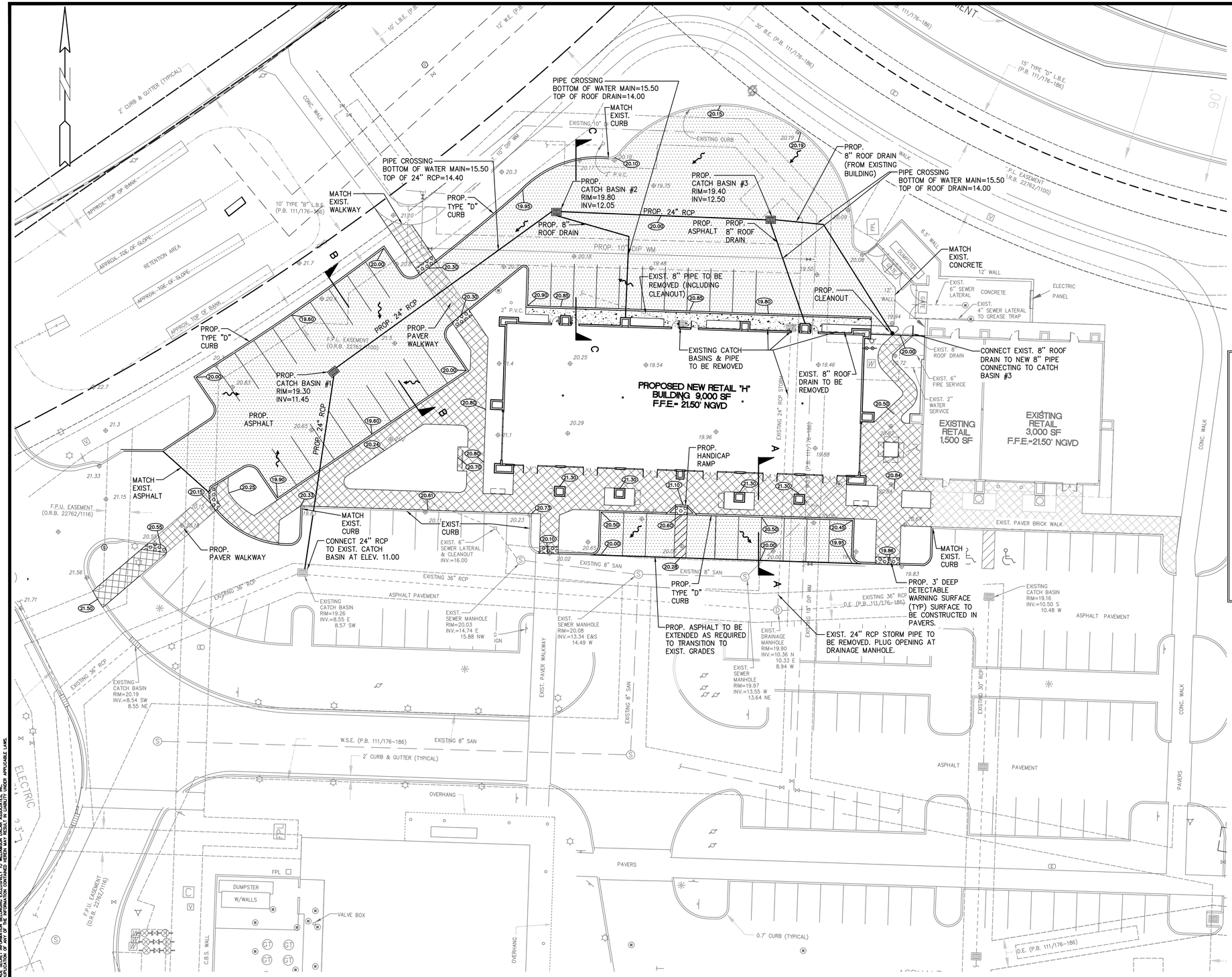

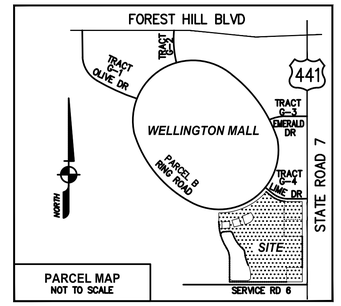

PARCEL MAP
NOT TO SCALE

NOTE:
1. ALL ELEVATIONS ARE REFERENCED TO NGVD 1929

NOTES:

1. MA□IM□M SLOPE FOR HANDICAP PAR□ING SPACES □ ACCESS AISLES TO BE □□.
□. CONTRACTOR RESPONSIBLE FOR ALL RE□□IRED DEMOLITION □ REMOVAL OF MATERIALS FROM THE SITE.
□. CONTRACTOR RESPONSIBLE FOR REMOVING AND RELOCATING AN□ E□ISTING ITEMS IN CONFLICT WITH NEW CONSTR□CTION.
□. CONTRACTOR TO FIELD VERIF□ E□ISTING GRADES PRIOR TO CONSTR□CTION.
□. CONTRACTOR RESPONSIBLE FOR REPAIRING ALL E□ISTING ITEMS DAMAGED D□RING CONSTR□CTION TO THEIR ORIGINAL CONDITIONS □AT A MINIM□M□.
6. MA□IM□M CROSS SLOPE ON WAL□WA□S TO BE □□.
□. MA□IM□M LENGTHWISE SLOPE ON WAL□WA□S TO BE □□.
□. CONTRACTOR TO COORDINATE PLACEMENT OF ROOF DRAINS AND CONDENSATE LINE TO PREVENT CONFLICT WITH PROPOSED WATER AND FIRE MAINS SERVICES.
□. REFER TO LANDSCAPE PLANS FOR DEMOLITION RELOCATION OF E□ISTING TREES □ HEDGES THAT CONFLICTS WITH NEW CONSTR□CTION. COORDINATE WITH LANDSCAPE ARCHITECT. REFER TO LANDSCAPE ARCHITECT FOR NEW LANDSCAPING.
1□. CONTRACTOR TO LOCATE E□ISTING □NDERGRO□ND □TILITIES PRIOR TO CONSTR□CTION. AVOID CONFLICT WITH NEW CONSTR□CTION AS RE□□IRED. CONTRACTOR RESPONSIBLE FOR RELOCATING E□ISTING □TILITIES AS RE□□IRED. CONTRACTOR TO FIELD LOCATE E□ISTING □TILITIES AND DETERMINE SIZE AND DEPTH OF SERVICES.
11. CONTRACTOR RESPONSIBLE FOR REPAIRING AN□ ASPHALT□LANDSCAPING □ ALL □TILITIES DAMAGED D□RING CONSTR□CTION.
1□. REFER TO PL□MBING PLANS FOR E□ISTING WATER MAIN CONNECTION□WATER METERS□□ BAC□FLOW PREVENTERS VERIF□ LOCATION IN FIELD. SEE PL□MBING PLANS FOR SANITAR□ CONNECTION AND PROVIDE CLEANO□T VERIF□ LOCATION IN FIELD.

LEGEND

- PROPOSED ASPHALT
- PROPOSED CONCRETE
- PROPOSED PAVERS
- PROPOSED VALVE
- PROPOSED PIPING
- PROPOSED FIRE DEPARTMENT CONNECTION
- PROPOSED FIRE HYDRANT
- PROPOSED BACKFLOW PREVENTER
- PROPOSED WATER METER
- PROP. CLEANOUT
- PROP. DDCV
- PROPOSED UTILITY EASEMENT
- PROPOSED SIGN
- EXISTING PIPING AND APPURTENANCES
- EXISTING BACKFLOW PREVENTOR
- CB EXISTING CATCH BASIN
- CO EXISTING CLEANOUT
- 7.10 EXISTING ELEVATION
- GM EXISTING GAS METER
- LP EXISTING CONCRETE LIGHT POLE
- MH EXISTING MANHOLE (AS DESIGNATED)
- MW EXISTING MONITORING WELL
- SIGN EXISTING SIGN (AS INDICATED)
- WPP EXISTING WOOD POWER POLE
- X EXISTING FENCE
- EXISTING GATE VALVE

GRADING AND DRAINAGE PLAN

SCALE: 1"=□□□

16-10

THIS DOCUMENT CONTAINS COPYRIGHTED MATERIAL AND TRADE SECRET INFORMATION BELONGING EXCLUSIVELY TO WILLIAMSON DACAR ASSOCIATES, INC. ANY UNAUTHORIZED USE, DISCLOSURE, DOWNLOADING OR APPLICATION OF ANY OF THE INFORMATION CONTAINED HEREIN, WILL BE STRICTLY ENFORCED UNDER APPLICABLE LAWS.

WILLIAMSON DACAR ASSOCIATES
Architecture / Planning / Engineering
ARCHITECTURE / ENGINEERING / PLANNING
19560 E. COUNTRY CLUB DRIVE, SUITE 106
AVENTURA, FLORIDA 33180
PH (727) 726-0951 www.williamsondacar.com

Architect: AA 0002541
Engineering: EB 0006884

HOLLAND ENGINEERING INC.
civil engineers
3900 HOLLYWOOD BLVD, STE. 303 - HOLLYWOOD - FL - 33021
(954)367-0371 . (954)367-0372 Fax
CA 7325
SUSAN C. HOLLAND, PE
Reg. no. 41831

WELLINGTON GREEN
PARCEL "F"
PHASE II RETAIL "H"
MODIFICATION
2545 SOUTH STATE ROAD 7
WELLINGTON, FLORIDA 33414

Revisions of Drawings

No.	Date	Revisions

Issues of Drawings

No.	Date	Issues
1	06.15.16	100% CD - PERMIT SET

Phase: PHASE
Checked: CHECKED: SH
Drawn: AA

Drawing Title
GRADING AND DRAINAGE PLAN

WDA Proj. No.: 1526-01
Owner Proj. No.:
Scale: 1"=20'

Sheet No.
C1.0
No. of Sheets.:

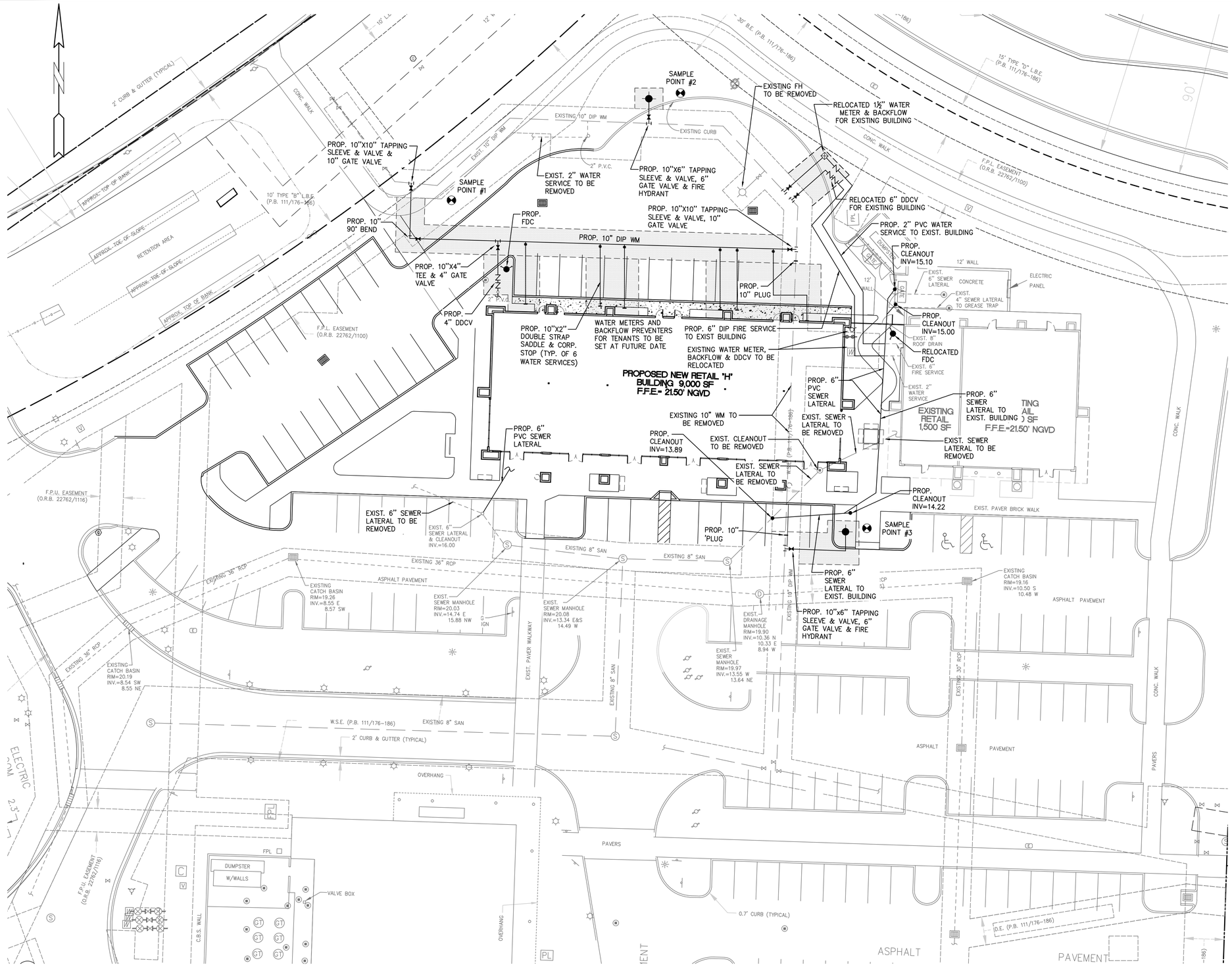

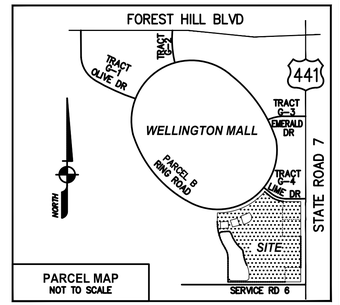

NOTES:

1. REFER TO PLUMBING PLANS FOR COORDINATION WITH BUILDING WATER AND SEWER SERVICES.
2. CONTRACTOR TO FIELD LOCATE EXISTING SEWER LATERAL AND CONFIRM DEPTH OF PIPE.
3. CONTRACTOR TO FIELD LOCATE ALL EXISTING UNDERGROUND UTILITIES AND CONFIRM DEPTH PRIOR TO CONSTRUCTION.
4. INSTALLATION OF ALL UTILITIES TO BE COORDINATED TO PREVENT PIPE CONFLICTS.
5. ALL BACKFLOW PREVENTERS TO BE INSTALLED IN ACCORDANCE WITH COUNTY REGULATIONS.
6. CONTRACTOR TO CONFIRM LOCATION, SIZE AND DEPTH OF ALL UTILITY SERVICES CONNECTED TO EXISTING BUILDING.
7. CONTRACTOR TO COORDINATE REMOVAL AND RELOCATION OF EXISTING UTILITY SERVICES WITH EXISTING BUILDING OWNER AND TENANTS.
8. RELOCATED WATER, SEWER AND FIRE SERVICE TO EXISTING BUILDING TO BE INSTALLED AND OPERATIONALLY CLEARED FOR USE BY CITY AND HEALTH DEPARTMENT PRIOR TO DISCONNECTING EXISTING BUILDING FROM SERVICE.
9. REFER TO SHEETS C6.0 AND C6.1 FOR VILLAGE OF WELLINGTON UTILITY DETAILS.
10. REFER TO SHEET C1.0 FOR PIPE CROSSING INFORMATION.

THE LOCATION AND SIZE OF ALL EXISTING UTILITIES SHOWN ON THE PLANS ARE APPROXIMATE AND ARE BASED ON THE BEST AVAILABLE INFORMATION. ADDITIONAL UTILITIES MAY EXIST WHICH ARE NOT SHOWN ON THE PLANS. THE CONTRACTOR SHALL BE RESPONSIBLE FOR THE LOCATION OF ALL EXISTING UTILITIES. THE CONTRACTOR SHALL VERIFY ALL UTILITIES, BY ELECTRONIC METHODS AND BY HAND EXCAVATION IN COORDINATION WITH ALL UTILITY COMPANIES, PRIOR TO BEGINNING ANY CONSTRUCTION OPERATIONS. CONTRACTOR SHALL NOTIFY THE ENGINEER IN WRITING OF DISCREPANCIES PRIOR TO BEGINNING WORK. ANY AND ALL CONFLICTS OF EXISTING UTILITIES WITH PROPOSED IMPROVEMENTS SHALL BE RESOLVED BY THE ENGINEER AND THE UTILITY OWNER PRIOR TO BEGINNING ANY CONSTRUCTION OPERATIONS. THIS WORK BY THE CONTRACTOR SHALL BE CONSIDERED INCIDENTAL TO THE CONTRACT AND NO ADDITIONAL COMPENSATION SHALL BE ALLOWED.

LEGEND

- PROPOSED ASPHALT
- PROPOSED CONCRETE
- PROPOSED PAVERS
- PROPOSED VALVE
- PROPOSED PIPING
- PROPOSED FIRE DEPARTMENT CONNECTION
- PROPOSED FIRE HYDRANT
- PROPOSED BACKFLOW PREVENTER
- PROPOSED WATER METER
- PROP. CLEANOUT
- PROP. DDCV
- PROPOSED UTILITY EASEMENT
- PROPOSED SIGN
- EXISTING PIPING AND APPURTENANCES
- EXISTING BACKFLOW PREVENTOR
- CB — EXISTING CATCH BASIN
- CO — EXISTING CLEANOUT
- 7.10 — EXISTING ELEVATION
- GM — EXISTING GAS METER
- LP — EXISTING CONCRETE LIGHT POLE
- MH — EXISTING MANHOLE (AS DESIGNATED)
- MW — EXISTING MONITORING WELL
- SIGN — EXISTING SIGN (AS INDICATED)
- WPP — EXISTING WOOD POWER POLE
- X — EXISTING FENCE
- EXISTING GATE VALVE

WATER AND SEWER PLAN

SCALE: 1"=20'

16-10

THIS DOCUMENT CONTAINS COPYRIGHTED MATERIAL AND TRADE SECRET INFORMATION BELONGING EXCLUSIVELY TO WILLIAMSON DACAR ASSOCIATES, INC. ANY UNAUTHORIZED USE, DISCLOSURE, DOWNLOADING OR APPLICATION OF ANY OF THE INFORMATION CONTAINED HEREIN MAY RESULT IN LIABILITY UNDER APPLICABLE LAWS.

WILLIAMSON DACAR ASSOCIATES
ARCHITECTURE / ENGINEERING / PLANNING
15560 LIGHTWAVE DRIVE, SUITE 106
CLEARWATER, FLORIDA 33760
PH (727) 726-0851 www.williamsondacar.com

Architect: AA 0002541
Engineering: EB 0006884

HOLLAND ENGINEERING INC.
civil engineers
3900 HOLLYWOOD BLVD, STE. 303 – HOLLYWOOD – FL – 33021
(954)367-0371 . (954)367-0372 Fax
CA 7325
SUSAN C. HOLLAND, PE
Reg. no. 41831

WELLINGTON GREEN
PARCEL "F"
PHASE II RETAIL "H"
MODIFICATION
2545 SOUTH STATE ROAD 7
WELLINGTON, FLORIDA 33414

Revisions of Drawings

No.	Date	Revisions

Issues of Drawings

No.	Date	Issues
1	06.15.16	100% CD – PERMIT SET

Phase: PHASE
Checked: CHECKED SH
Drawn: AA

Drawing Title: WATER AND SEWER PLAN

WDA Proj. No.: 1526-01
Owner Proj. No.:
Scale: 1"=20'

Sheet No. C2.0
No. of Sheets.:

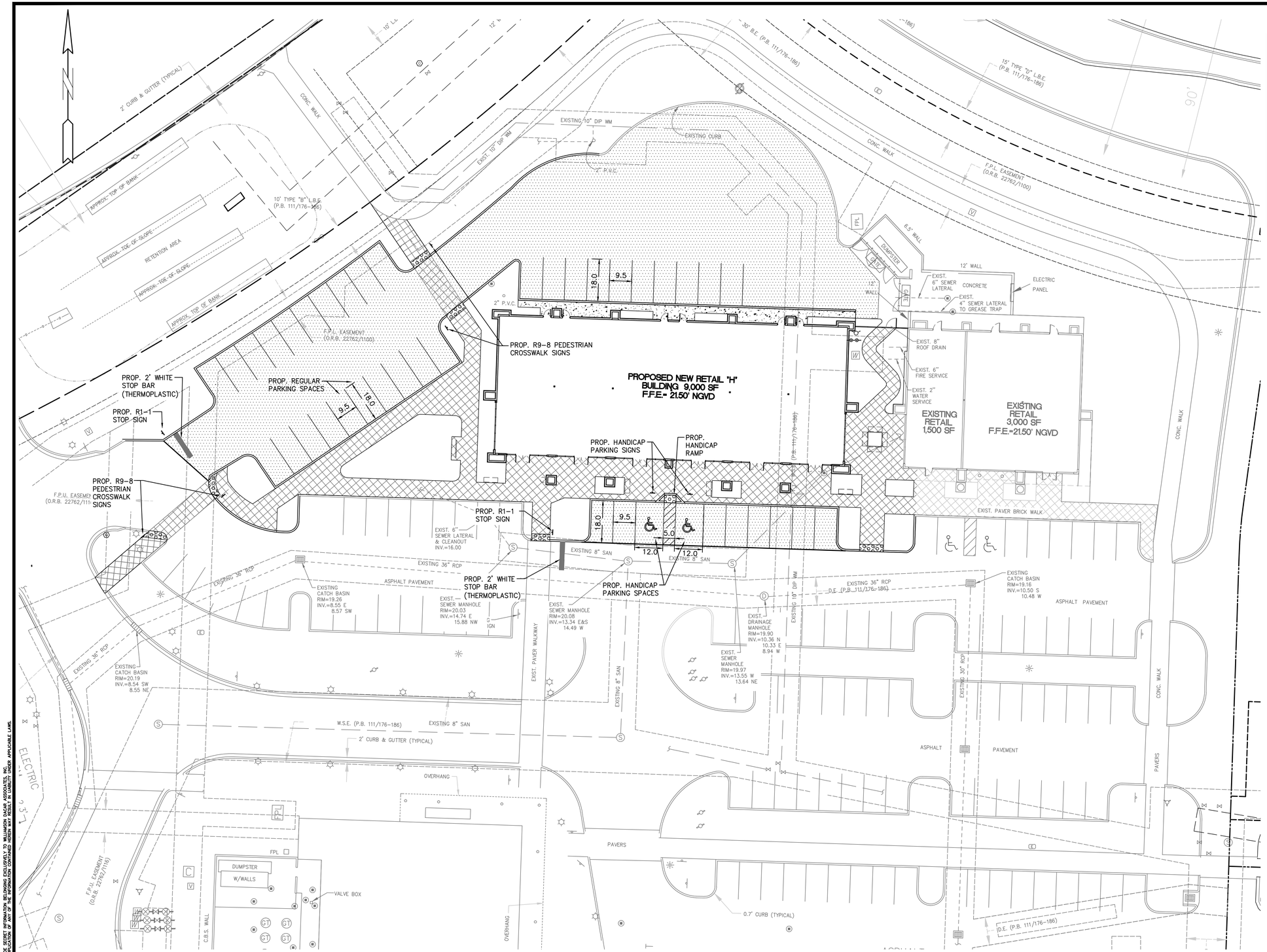

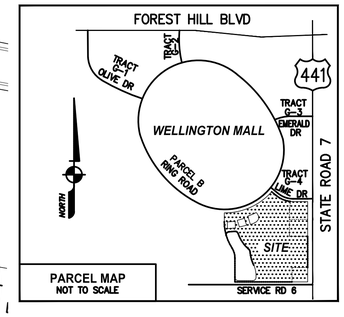

PARCEL MAP
NOT TO SCALE

NOTES:

1. REFER TO SHEET A2.2 FOR PARKING SPACE STRIPING DETAILS.
2. REFFER TO SHEET C5.0 FOR SIGNAGE DETAILS.

LEGEND

- PROPOSED ASPHALT
- PROPOSED CONCRETE
- PROPOSED PAVERS
- PROPOSED VALVE
- PROPOSED PIPING
- PROPOSED FIRE DEPARTMENT CONNECTION
- PROPOSED FIRE HYDRANT
- PROPOSED BACKFLOW PREVENTER
- PROPOSED WATER METER
- PROP. CLEANOUT
- PROP. DDCV
- PROPOSED UTILITY EASEMENT
- PROPOSED SIGN
- EXISTING PIPING AND APPURTENANCES
- EXISTING BACKFLOW PREVENTOR
- CB — EXISTING CATCH BASIN
- CO — EXISTING CLEANOUT
- 7.10 — EXISTING ELEVATION
- GM — EXISTING GAS METER
- LP — EXISTING CONCRETE LIGHT POLE
- MH — EXISTING MANHOLE (AS DESIGNATED)
- MW — EXISTING MONITORING WELL
- SIGN — EXISTING SIGN (AS INDICATED)
- WPP — EXISTING WOOD POWER POLE
- EXISTING FENCE
- EXISTING GATE VALVE

PAVEMENT MARKING & SIGNAGE PLAN

SCALE: 1"=20'

16-10

THIS DOCUMENT CONTAINS COPYRIGHTED MATERIAL AND TRADE SECRET INFORMATION BELONGING EXCLUSIVELY TO WILLIAMSON DACAR ASSOCIATES, INC. ANY UNAUTHORIZED USE, DISCLOSURE, COPYING OR DISTRIBUTION OF ANY OF THE INFORMATION CONTAINED HEREIN, IN WHOLE OR IN PART, IS STRICTLY PROHIBITED UNDER APPLICABLE LAWS.

WILLIAMSON DACAR ASSOCIATES
Architecture / Planning / Engineering
ARCHITECTURE / ENGINEERING / PLANNING
15560 LIGHTWAVE DRIVE, SUITE 106
TAMPA, FLORIDA 33647
PH (727) 725-0951 www.williamsondacar.com

Architect: AA 0002541
Engineering: EB 0006884

HOLLAND ENGINEERING INC.
civil engineers
3900 HOLLYWOOD BLVD, STE. 303 - HOLLYWOOD - FL - 33021
(954)367-0371 - (954)367-0372 Fax
CA 7325
SUSAN C. HOLLAND, PE
Reg. no. 41831

WELLINGTON GREEN
PARCEL "F"
PHASE II RETAIL "H"
MODIFICATION
2545 SOUTH STATE ROAD 7
WELLINGTON, FLORIDA 33414

Revisions of Drawings

No.	Date	Revisions

Issues of Drawings

No.	Date	Issues
1	06.15.16	100% CD - PERMIT SET

Phase: PHASE
Checked: CHECKED: SH
Drawn: AA

Drawing Tittle
PAVEMENT MARKING & SIGNAGE PLAN

WDA Proj. No.: 1526-01
Owner Proj. No.:
Scale: 1"=20'

Sheet No.
C3.0
No. of Sheets.:

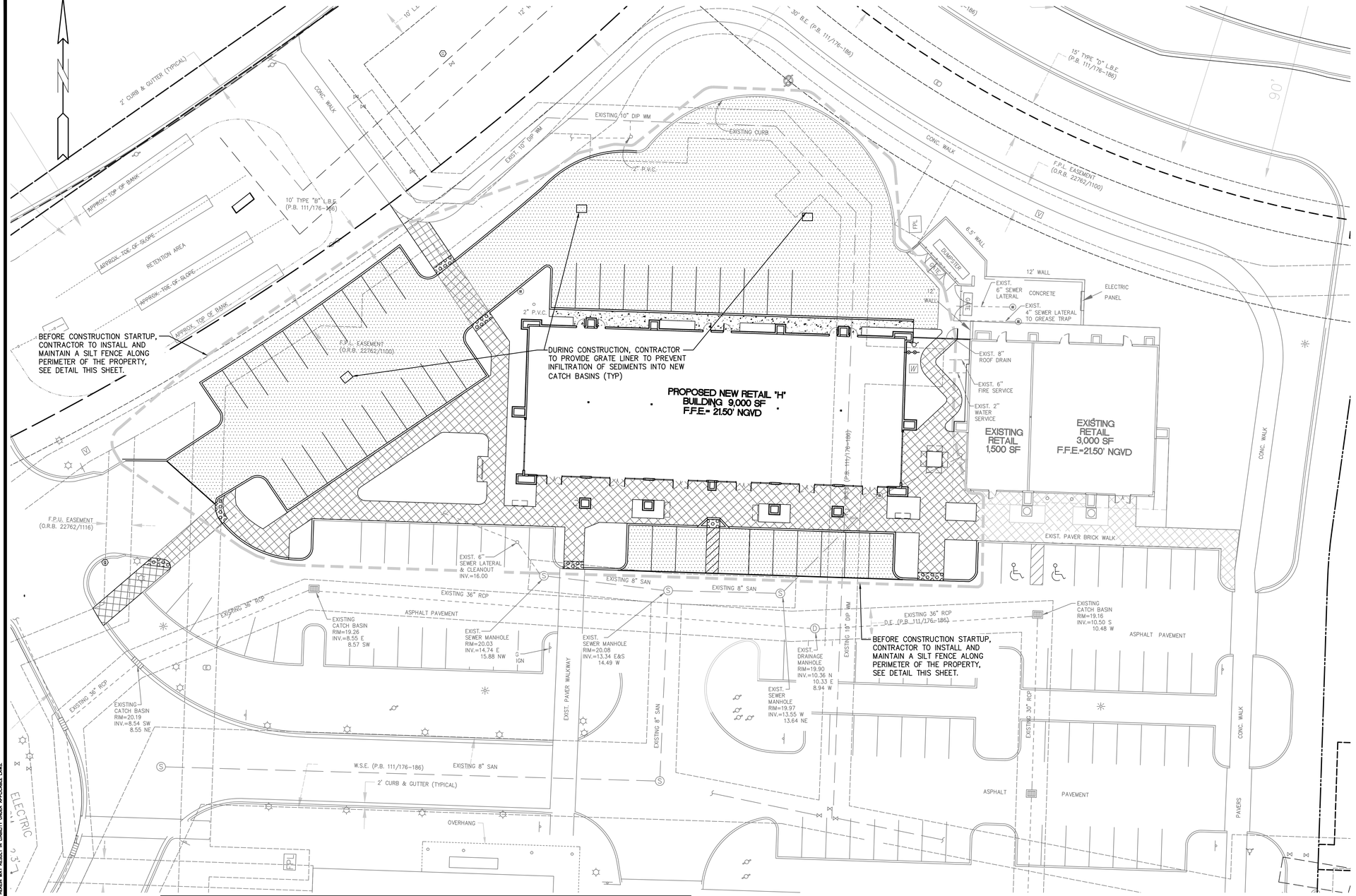

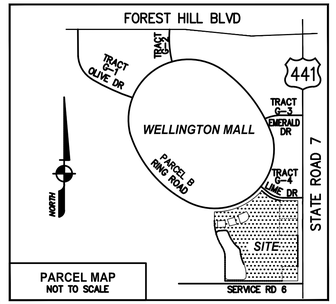

BMP NOTES:

1. ALL SEDIMENT CONTROL MEASURES ARE TO BE ADJUSTED TO MEET FIELD CONDITIONS AT THE TIME OF CONSTRUCTION AND BE CONSTRUCTED PRIOR TO ANY GRADING OR DISTURBANCE OF EXISTING SURFACE MATERIAL ON BALANCE OF SITE. PERIMETER SEDIMENT BARRIERS SHALL BE CONSTRUCTED TO PREVENT SEDIMENT OR TRASH FROM FLOWING OR FLOATING ON TO ADJACENT PROPERTIES.

2. PERIODIC INSPECTION AND MAINTENANCE OF ALL SEDIMENT CONTROL STRUCTURES MUST BE PROVIDED TO ENSURE INTENDED PURPOSE IS ACCOMPLISHED. THE DEVELOPER, OWNER AND/OR CONTRACTOR SHALL BE CONTINUALLY RESPONSIBLE FOR ALL SEDIMENT CONTROLS. SEDIMENT CONTROL MEASURES SHALL BE IN WORKING CONDITION AT THE END OF EACH WORKING DAY.

3. SEDIMENT WILL BE PREVENTED FROM ENTERING ANY STORM WATER SYSTEM, DITCH OR CHANNEL. ALL STORMWATER INLETS THAT ARE MADE OPERABLE DURING CONSTRUCTION SHALL BE PROTECTED SO THAT SEDIMENT-LADEN WATER CANNOT ENTER THE CONVEYANCE SYSTEM WITHOUT FIRST BEING FILTERED OR OTHERWISE TREATED TO REMOVE SEDIMENT.

4. WHERE CONSTRUCTION VEHICLE ACCESS ROUTES INTERSECT PAVED PUBLIC ROADS, PROVISIONS SHALL BE MADE TO MINIMIZE THE TRANSPORT OF SEDIMENT BY TRACKING ONTO THE PAVED SURFACE. WHERE SEDIMENT IS TRANSPORTED ONTO A PUBLIC ROAD SURFACE WITH CURBS AND GUTTERS, THE ROAD SHALL BE CLEANED THOROUGHLY AT THE END OF EACH DAY. SEDIMENT SHALL BE REMOVED FROM THE ROADS BY SHOVELING OR SWEEPING AND TRANSPORTED TO A SEDIMENT CONTROL DISPOSAL AREA. STREET WASHING SHALL BE ALLOWED ONLY AFTER SEDIMENT IS REMOVED IN THIS MANNER. THIS PROVISION SHALL APPLY TO INDIVIDUAL SUBDIVISION LOTS AS WELL AS TO LARGER LAND DISTURBING ACTIVITIES.

5. PERMANENT OR TEMPORARY SOIL STABILIZATION SHALL BE APPLIED TO DENUDED AREAS WITHIN SEVEN (7) DAYS AFTER FINAL GRADE IS REACHED ON ANY PORTION OF THE SITE. TEMPORARY SOIL STABILIZATION SHALL BE APPLIED WITHIN SEVEN (7) DAYS TO DENUDED AREAS THAT MAY NOT BE AT FINAL GRADE BUT WILL REMAIN UNDISTURBED FOR LONGER THAN THIRTY (30) DAYS. PERMANENT STABILIZATION SHALL BE APPLIED TO AREAS THAT ARE TO BE LEFT UNDISTURBED FOR MORE THAN ONE YEAR.

6. DURING CONSTRUCTION OF THE PROJECT, SOIL STOCKPILES SHALL BE STABILIZED, COVERED OR CONTAINED WITH SEDIMENT TRAPPING MEASURES. THE CONTRACTOR IS RESPONSIBLE FOR THE TEMPORARY PROTECTION AND PERMANENT STABILIZATION OF ALL SOIL STOCKPILES ON SITE AS WELL AS SOIL INTENTIONALLY TRANSPORTED FROM THE PROJECT SITE.

7. ALL TEMPORARY EROSION AND SEDIMENT CONTROL MEASURES SHALL BE REMOVED WITHIN 30 DAYS AFTER FINAL SITE STABILIZATION OR AFTER THE TEMPORARY MEASURES ARE NO LONGER NEEDED.

8. PROPERTIES AND WATER WAYS DOWNSTREAM FROM CONSTRUCTION SITE SHALL BE PROTECTED FROM SEDIMENT DEPOSITION AND EROSION AT ALL TIMES DURING CONSTRUCTION.

9. CONTRACTOR IS RESPONSIBLE FOR ALL SURFACE WATER DISCHARGES, RAINFALL RUN OFF OR DEWATERING ACTIVITIES.

10. CONTRACTOR MUST INCORPORATE ALL BMP'S NECESSARY TO MEET OR EXCEED STATE WATER QUALITY AND SWPPP REQUIREMENTS.

11. THE POLLUTION PREVENTION PLAN IS A MINIMUM GUIDELINE ONLY. ADDITIONAL BMP'S MAY BE NECESSARY AT CONTRACTOR'S EXPENSE.

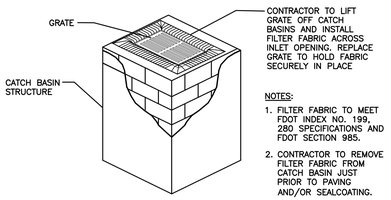

POLLUTION PREVENTION FOR CATCH BASIN
N.T.S.

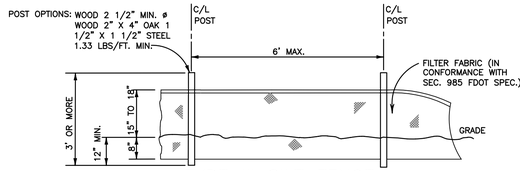

TYPE III SILT FENCE
NTS

LEGEND

- PROPOSED ASPHALT
- PROPOSED CONCRETE
- PROPOSED PAVERS
- PROPOSED VALVE
- PROPOSED PIPING
- PROPOSED FIRE DEPARTMENT CONNECTION
- PROPOSED FIRE HYDRANT
- PROPOSED BACKFLOW PREVENTER
- PROPOSED WATER METER
- PROP. CLEANOUT
- PROP. DDCV
- PROPOSED UTILITY EASEMENT
- PROPOSED SIGN
- EXISTING PIPING AND APPURTENANCES
- EXISTING BACKFLOW PREVENTOR
- EXISTING CATCH BASIN
- EXISTING CLEANOUT
- EXISTING ELEVATION
- EXISTING GAS METER
- EXISTING CONCRETE LIGHT POLE
- EXISTING MANHOLE (AS DESIGNATED)
- EXISTING MONITORING WELL
- EXISTING SIGN (AS INDICATED)
- EXISTING WOOD POWER POLE
- EXISTING FENCE
- EXISTING GATE VALVE

STORMWATER POLLUTION PREVENTION PLAN

SCALE: 1"=20'

16-10

THIS DOCUMENT CONTAINS COPYRIGHTED MATERIAL AND TRADE SECRET INFORMATION BELONGING EXCLUSIVELY TO WILLIAMSON DACAR ASSOCIATES, INC. ANY UNAUTHORIZED USE, DISCLOSURE, REPRODUCTION OR DEVIATION FROM ANY OF THE INFORMATION CONTAINED HEREIN SHALL BE IN VIOLATION OF APPLICABLE LAWS.

WILLIAMSON DACAR ASSOCIATES
Architecture / Planning / Engineering
ARCHITECTURE / ENGINEERING / PLANNING
1550 EAST LIGHTWAVE DRIVE, SUITE 106
LAKE WORTH, FLORIDA 33460
PH (727) 725-0951 www.williamsondacar.com

Architect: AA 0002541
Engineering: EB 0006884

HOLLAND ENGINEERING INC.
civil engineers
3900 HOLLYWOOD BLVD, STE. 303 - HOLLYWOOD - FL - 33021
(954)367-0371 - (954)367-0372 Fax
CA 7325
SUSAN C. HOLLAND, PE
Reg. no. 41831

WELLINGTON GREEN
PARCEL "F"
PHASE II RETAIL "H"
MODIFICATION
2545 SOUTH STATE ROAD 7
WELLINGTON, FLORIDA 33414

Revisions of Drawings

No.	Date	Revisions

Issues of Drawings

No.	Date	Issues
1	06.15.16	100% CD - PERMIT SET

Phase: PHASE
Checked: CHECKED: SH
Drawn: AA

Drawing Title
STORMWATER POLLUTION PREVENTION PLAN

WDA Proj. No.: 1526-01
Owner Proj. No.:
Scale: 1"=20'

Sheet No.
C4.0
No. of Sheets:

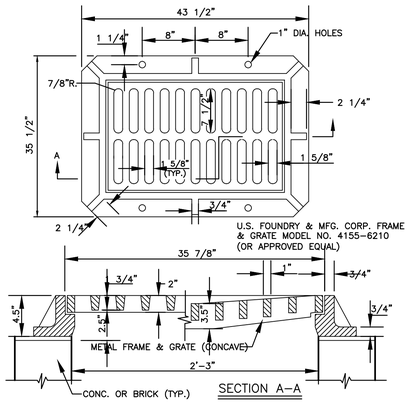

FRAME & GRATE DETAIL

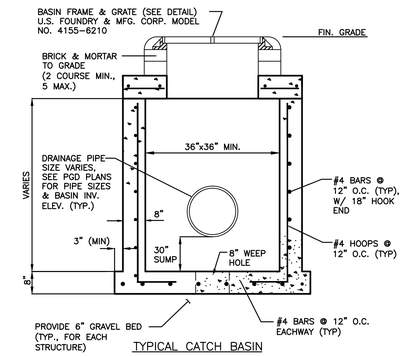

TYPICAL CATCH BASIN

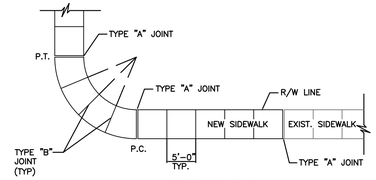

SIDEWALK PLAN

N.T.S.

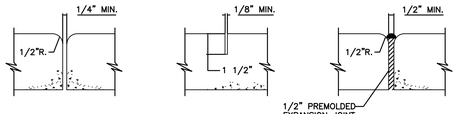

TYPE – A (OPEN TYPE JOINTS)

TYPE – B (SAWED JOINTS)

TYPE – C (EXPANSION JOINTS)

SIDEWALK JOINTS

N.T.S.

TYPICAL SIDEWALK THICKNESS (T)

LOCATION :	"T"
PEDESTRIAN AREAS	4"
DRIVEWAYS & OTHER	8"

TABLE OF SIDEWALK JOINTS

TYPE	LOCATION :
"A"	P.C. & P.T. OF CURVES & TIE-IN JUNCTION OF EXIST. TO NEW SIDEWALKS.
"B"	5'-0" O.C. ON SIDEWALKS.
"C"	* WHERE SIDEWALK ABUTS CONC. CURBS & DRIVEWAYS OR SIMILIAR STRUCTURES. EXPANSION JOINTS EVERY 50' O.C.

NOTES:

1. EXPANSION JOINTS EVERY 50' O.C.
2. CONC. MIN. 2500 PSI, NO STEEL IN SIDEWALK
3. 8" THK. SIDEWALK ACROSS DRIVEWAYS

* INSTALLED AT THE DISCRETION OF THE ENGINEER

SIDEWALK DETAIL

NTS

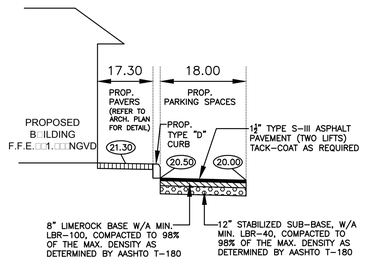

SECTION A□A

N.T.S.

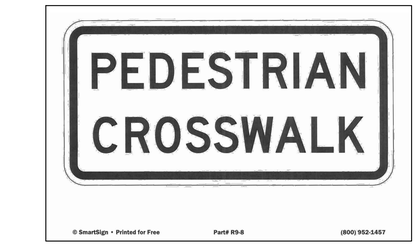

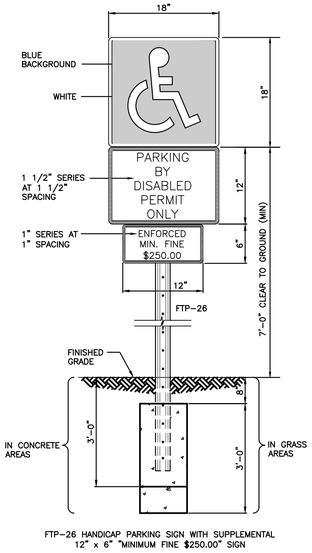

FTP-26 HANDICAP PARKING SIGN WITH SUPPLEMENTAL 12" x 6" "MINIMUM FINE $250.00" SIGN

NOTES:

1. TOP PORTION OF SIGN SHALL HAVE A REFLECTORIZED BLUE BACKGROUND.
2. BOTTOM PORTION OF SIGN SHALL HAVE A REFLECTORIZED WHITE BACKGROUND WITH BLACK OPAQUE LEGEND AND BORDER.
3. LOCATE SIGN AT CENTERLINE AND HEAD OF EACH HANDICAP PARKING STALL, WHERE APPLICABLE.

HANDICAP PARKING SIGN

NTS

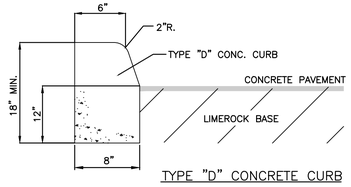

TYPE "D" CONCRETE CURB

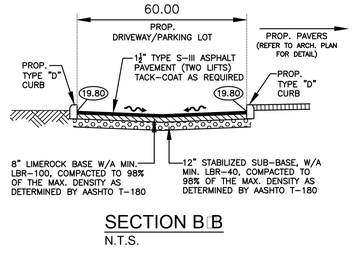

SECTION B□B

N.T.S.

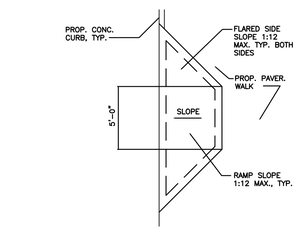

TYPICAL HANDICAP RAMP

DETAIL

NTS

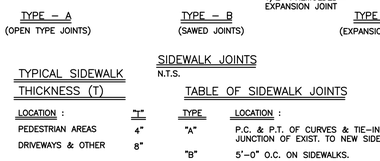

PAVER INSTALLATION DETAIL

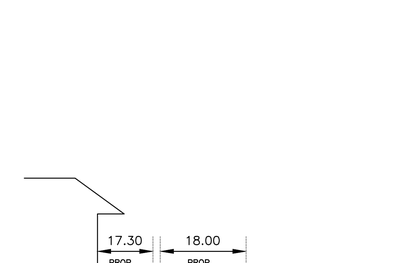

SECTION C□C

N.T.S.

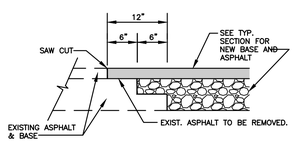

NOTE:

THIS METHOD OF PAVEMENT JOINT SHALL BE USED FOR ANY APPLICATION OR CONSTRUCTION WHERE PROPOSED PAVEMENT AND BASE WILL BE CONNECTED TO EXISTING PAVEMENT AND BASE.

PAVEMENT JOINT DETAIL

DETAIL

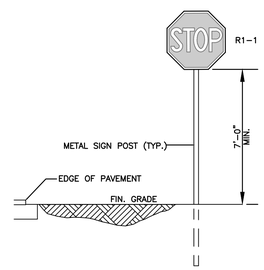

TYPICAL SIGN INSTALLATION

NTS

CIVIL DETAILS & SECTIONS

N.T.S.

THIS DOCUMENT CONTAINS COPYRIGHTED MATERIAL AND TRADE SECRET INFORMATION BELONGING EXCLUSIVELY TO WILLIAMSON DACAR ASSOCIATES, INC. ANY UNAUTHORIZED USE, DISCLOSURE, COPYING OR PUBLICATION OF ANY OF THE INFORMATION CONTAINED HEREIN MAY RESULT IN LIABILITY UNDER APPLICABLE LAWS.

WILLIAMSON DACAR ASSOCIATES
Architecture / Planning / Engineering
ARCHITECTURE / ENGINEERING / PLANNING
1556O LIGHTWAVE DRIVE, SUITE 106
CLEARWATER, FL 33760
PH (727) 725-0951 www.williamsondacar.com

Architect: AA 0002541
Engineering: EB 0006884

HOLLAND ENGINEERING INC.
civil engineers
3900 HOLLYWOOD BLVD, STE. 303 – HOLLYWOOD – FL – 33021
(954)367-0371 - (954)367-0372 Fax
CA 7325
SUSAN C. HOLLAND, PE
Reg. no. 41831

WELLINGTON GREEN
PARCEL "F"
PHASE II RETAIL "H"
MODIFICATION
2545 SOUTH STATE ROAD 7
WELLINGTON, FLORIDA 33414

Revisions of Drawings

No.	Date	Revisions

Issues of Drawings

No.	Date	Issues
1	06.15.16	100% CD – PERMIT SET

Phase: PHASE
Checked: CHECKED: SH
Drawn: AA

Drawing Tittle

CIVIL DETAILS & SECTIONS

WDA Proj. No.: 1526-01
Owner Proj. No.:
Scale: N.T.S.

Sheet No.
C5.0
No. of Sheets.:

THIS DOCUMENT CONTAINS COPYRIGHTED MATERIAL AND TRADE SECRET INFORMATION BELONGING EXCLUSIVELY TO WILLIAMSON DACAR ASSOCIATES, INC. ANY UNAUTHORIZED USE, DISCLOSURE, DISSEMINATION OR DUPLICATION OF ANY OF THE INFORMATION CONTAINED HEREIN MAY RESULT IN LIABILITY UNDER APPLICABLE LAWS.

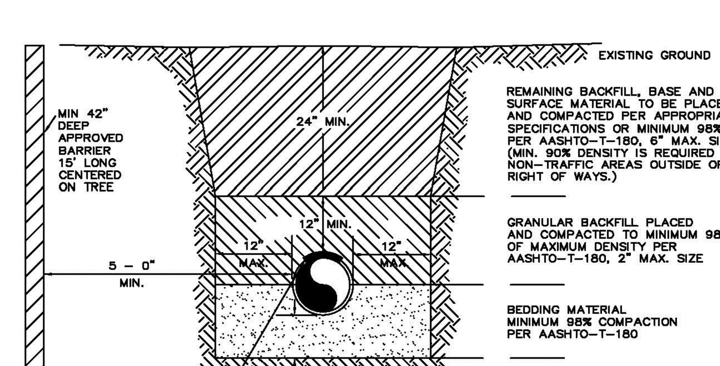

NOTES:

1. BEDDING SHALL CONSIST OF IN-SITU GRANULAR MATERIAL OR WASHED AND GRADED LIMEROCK 3/8" TO 7/8" SIZING. UNSUITABLE IN-SITU MATERIALS SUCH AS MUCK DEBRIS AND LARGER ROCKS SHALL BE REMOVED.
2. THE PIPE SHALL BE FULLY SUPPORTED FOR ITS ENTIRE LENGTH WITH APPROPRIATE COMPACTION UNDER THE PIPE HAUNCHES.
3. THE PIPE SHALL BE PLACED IN A DRY TRENCH.
4. BACKFILL SHALL BE FREE OF UNSUITABLE MATERIAL SUCH AS LARGE ROCK, MUCK, ROOTS AND DEBRIS.
5. DENSITY TESTS ARE REQUIRED IN 2 FOOT LIFTS ABOVE THE PIPE AT INTERVALS OF 400' MAXIMUM. MINIMUM 1 SET SET OF TESTS FOR EACH WASTELAND GRAVITY MAIN RUN, OR AS DIRECTED BY THE INSPECTOR.
6. THE DEVELOPER/CONTRACTOR SHALL BE RESPONSIBLE TO COMPLY WITH ALL TRENCH SAFETY LAWS AND REGULATIONS.
7. SEE SEPERATE DETAIL FOR "PIPE INSTALLATION UNDER EXISTING PAVEMENT - OPEN CUT."
8. THE AFFECTED AREA SHALL BE RESTORED TO EQUAL OR BETTER CONDITION OR AS SPECIFIED IN PERMIT/CONTRACT DOCUMENTS.
9. APPROVED MAGNETIC TAPE IS REQUIRED FOR: ALL PVC MAINS. THE TAPE SHALL BE INSTALLED 12" ABOVE PIPE.
10. ROOT BARRIER IS REQUIRED FOR APPROVED TREE INSTALLATION CLOSER THAN 10 FEET FROM UTILITY FACILITIES.
11. CONTINUOUS 4" WIDE PAINT STRIPING IS REQUIRED FOR DIP/PCCP WATER MAINS (BLUE) AND DIP RECLAIMED WATER MAINS (PURPLE).

V.O.W. CONSTRUCTION STANDARDS & DETAILS

REVISION: JUN. 2005, DEC. 2002, FEB. 2000, NOV. 1999 — TYPICAL TRENCH DETAIL — PAGE No. D1

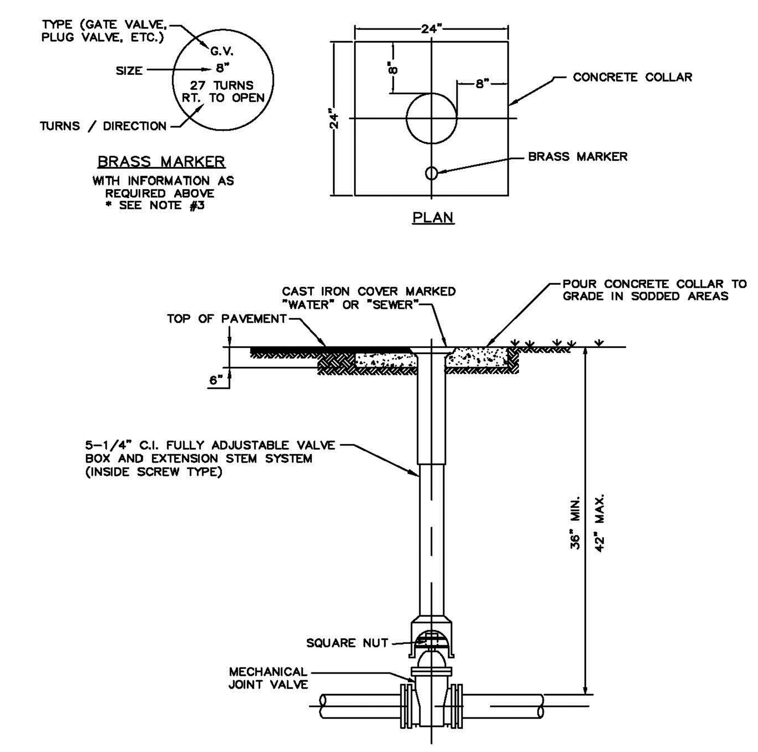

NOTES:

1. AS NOTED, ALL VALVE BOXES AND STEMS SHALL BE FULLY ADJUSTABLE. THE VALVE BOX SHALL BE AS MANUFACTURED BY AMERICAN FLOW CONTROL, TRENCH ADAPTER ASSEMBLY.
2. NO VALVES SHALL BE DESIGNED OR CONSTRUCTED WITHIN CURBS, SIDEWALKS OR DRIVEWAYS.
3. BRASS MARKERS ARE NOT REQUIRED IN PAVEMENT.
4. VALVE NUT EXTENSION STEM REQUIRED WHEN TOP OF UNIT ELEVATION EXCEEDS 3.5 FROM FINISH GRADE. EXTENSION STEM TO COME WITHIN 6" OF FINISH GRADE.

V.O.W. CONSTRUCTION STANDARDS & DETAILS

REVISION: JAN. 2007, DEC. 2002, JAN. 2000, NOV. 1999 — TYPICAL VALVE SETTING — PAGE No. D2

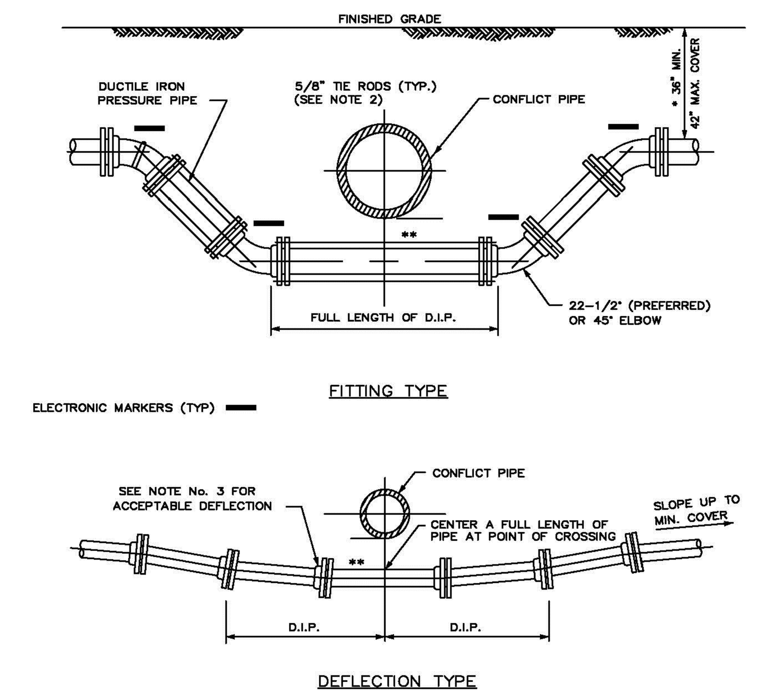

NOTES:

1. THESE METHODS ARE TO BE USED WHEN INSUFFICIENT COVER EXISTS TO ALLOW PRESSURE PIPE TO CROSS ABOVE CONFLICT PIPE WITH 6" VERTICAL SEPARATION AND MAINTAIN 30" COVER TO FINISHED GRADE AND MEET CURRENT FDEP SEPARATION STANDARDS.
2. THE DEFLECTION TYPE CROSSING IS PREFERRED.
3. DO NOT EXCEED 75% OF MANUFACTURERS RECOMMENDED MAXIMUM JOINT DEFLECTION.
4. MECHANICALLY RESTRAIN ALL FITTINGS, AS PER MANUFACTURERS RECOMMENDATION. AND APPROVED CONSTRUCTION PLANS.
5. LOCATOR DISCS MUST BE PLACED ON ALL FITTING TYPE DEFLECTIONS.

* 36" MIN IN STATE ROAD R/W AND UNDER ASPHALT

** SEPARATION TO CONFORM WITH LATEST FDEP SEPERATION REQUIREMENTS.

V.O.W. CONSTRUCTION STANDARDS & DETAILS

REVISION: JUN.. 2005, DEC. 2002, NOV. 1999, JULY 1998 JAN 2007 — PRESSURE PIPE CONFLICT DETAIL — PAGE No. D3

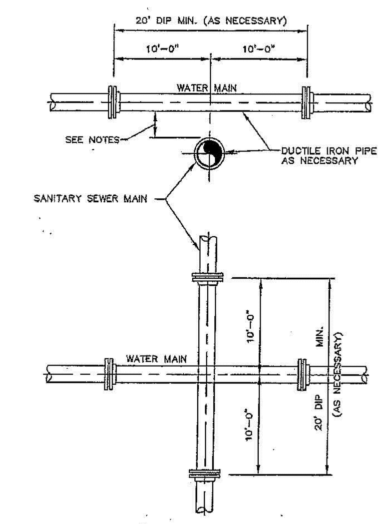

NOTES:

1. STORM SEWER, GRAVITY WASTEWATER AND RECLAIMED WATER MAIN CROSSING UNDER POTABLE WATER MAINS SHALL BE LAID TO PROVIDE A MINIMUM VERTICAL DISTANCE OF TWELVE (12) INCHES BETWEEN THE INVERT OF THE UPPER PIPE AND THE CROWN OF THE LOWER PIPE. WHERE THIS MINIMUM SEPARATION CANNOT BE MAINTAINED, THE CROSSING SHALL BE ARRANGED SO THAT THE STORM/WASTEWATER/RECLAIMED WATER PIPE JOINTS AND POTABLE WATER MAIN JOINTS ARE EQUIDISTANT FROM THE POINT OF CROSSING WITH NO LESS THAN TEN (10) FEET BETWEEN ANY TWO JOINTS. BOTH PIPES SHALL BE D.I.P., AND THE MINIMUM VERTICAL SEPARATION SHALL BE 6 INCHES. WHERE THERE IS NO ALTERNATE TO STORM/WASTEWATER/RECLAIMED WATER PIPES CROSSING OVER A POTABLE WATER MAIN, THE CRITERIA FOR MINIMUM 12" VERTICAL SEPARATION BETWEEN LINES AND JOINT ARRANGEMENT AS STATED ABOVE, SHALL BE REQUIRED, AND BOTH PIPES SHALL BE D.I.P. RESPECTIVE OF SEPARATION. D.I.P. IS NOT REQUIRED FOR STORM SEWERS.
2. WHENEVER POSSIBLE MAINTAIN MIN. TEN (10) FEET HORIZONTAL DISTANCE (WALL TO WALL) BETWEEN POTABLE WATER MAIN AND STORM SEWER, WASTEWATER MAIN, OR FORCE MAIN (A MIN. 6' SEPARATION MAY BE APPROVED ON A CASE BY CASE BASIS). MAINTAIN MIN. THREE (3) FEET HORIZONTAL DISTANCE (WALL TO WALL) BETWEEN RECLAIMED WATER MAIN AND POTABLE WATER MAIN, STORM SEWER, WASTEWATER GRAVITY MAIN OR FORCE MAIN.
3. FORCE MAIN CROSSING POTABLE WATER MAIN OR RECLAIMED WATER MAIN SHALL BE LAID TO PROVIDE A MINIMUM VERTICAL DISTANCE OF TWELVE (12) INCHES BETWEEN THE OUTSIDE OF THE FORCE MAIN AND OUTSIDE OF THE POTABLE WATER MAIN OR RECLAIMED WATER MAIN WITH THE POTABLE WATER MAIN OR RECLAIMED WATER MAIN CROSSING OVER THE FORCE MAIN.
4. WASTEWATER LATERALS SHALL CROSS UNDER POTABLE WATER MAINS WITH A MIN. 12" VERTICAL SEPARATION WHENEVER POSSIBLE. WHERE THIS MINIMUM SEPARATION CANNOT BE MAINTAINED, A 20' SECTION OF DUCTILE IRON PIPE POTABLE WATER MAIN CENTERED ON THE CROSSING IS REQUIRED AND THE MINIMUM VERTICAL SEPARATION SHALL BE 6". WHERE THERE IS NO ALTERNATIVE TO A WASTEWATER LATERAL PIPE CROSSING OVER A POTABLE WATER MAIN, A MINIMUM 12" VERTICAL SEPARATION IS REQUIRED. THE LATERAL SHALL BE P.V.C. C-900 SDR18 OR BETTER. THE POTABLE WATER MAIN SHALL BE D.I.P. AND THE PIPE JOINTS SHALL BE EQUIDISTANT FROM THE POINT OF CROSSING.
5. POTABLE WATER SERVICE LINES SHALL CROSS OVER WASTEWATER MANS WITH MIN. 12" VERTICAL SEPARATION. WHERE THIS MIN. SEPARATION CAN NOT BE MAINTAINED, THE WATER SERVICE SHALL BE ENCASED IN A MIN. 10' LONG CASING CENTERED OVER THE CROSSING WITH MIN. 6" VERTICAL SEPARATION.

V.O.W. CONSTRUCTION STANDARDS & DETAILS

REVISION: JUN. 2005, JAN. 2000, NOV. 1999, JULY 1998 — WATER MAIN / SANITARY SEWER CONFLICT — PAGE No. D4

MIN. LENGTH OF PIPE (FEET) TO BE RESTRAINED
(SOURCES: EBAA IRON RESTRAINT LENGTH CALCULATION PROGRAM FOR PVC PIPE, RELEASE 3.1, AND DIPRA THRUST RESTRAINT FOR DUCTILE IRON PIPE, RELEASE 3.2)

FITTING TYPE		4"	6"	8"	10"	12"	16"	20"	24"	30" (200psi)	36" (200psi)	42" (200psi)	48" (200psi)
90° HORIZ. BEND		14	20	25	30	35	45	54	62	98	112	124	135
45° HORIZ. BEND		6	8	11	13	15	19	22	26	41	46	51	56
22.5° HORIZ. BEND		3	4	5	6	7	9	11	12	19	22	25	27
11.25° HORIZ. BEND		1	2	3	3	4	4	5	6	10	11	12	13
90° VERT. OFFSET	UPPER BEND	29	41	53	64	74	95	115	134	214	246	276	304
	LOWER BEND	7	10	13	16	19	25	30	35	57	66	74	83
45° VERT. OFFSET	UPPER BEND	12	19	24	29	34	39	48	56	89	102	114	126
	LOWER BEND	3	4	6	7	8	10	12	15	23	27	31	34
22.5° VERT. OFFSET	UPPER BEND	6	9	12	14	17	19	23	27	43	49	55	60
	LOWER BEND	1	2	4	4	4	5	6	7	11	13	15	16
11.25° VERT. OFFSET	UPPER BEND	3	4	6	7	8	9	11	13	21	24	27	30
	LOWER BEND	1	1	1	2	2	2	3	3	6	6	7	8
PLUG (DEAD END)		32	45	59	70	83	107	129	151	214	246	276	304
IN-LINE VALVE		32	45	45	45	45	55	65	80	110	125	140	155
TEE (BRANCH RESTRAINT)	4"X ø	23	–	–	–	–	–	–	–	–	–	–	–
	6"X ø	21	35	–	–	–	–	–	–	–	–	–	–
	8"X ø	18	34	47	–	–	–	–	–	–	–	–	–
	10"X ø	16	32	46	58	–	–	–	–	–	–	–	–
	12"X ø	13	30	44	57	69	–	–	–	–	–	–	–
	16"X ø	7	26	41	55	67	90	–	–	–	–	–	–
	20"X ø	1	21	38	52	65	88	109	–	–	–	–	–
	24"X ø	1	16	34	49	62	86	108	129	–	–	–	–
	30"X ø	1	8	28	44	58	83	106	127	208	–	–	–
	36"X ø	1	1	22	39	54	80	103	124	206	240	–	–
	42"X ø	1	1	15	33	49	77	100	122	205	239	270	–
	48"X ø	1	1	7	27	44	73	97	120	203	238	269	298
REDUCER (LARGER PIPE RESTRAINT)	6"X ø	23	–	–	–	–	–	–	–	–	–	–	–
	8"X ø	38	25	–	–	–	–	–	–	–	–	–	–
	10"X ø	57	43	24	–	–	–	–	–	–	–	–	–
	12"X ø	72	60	44	41	–	–	–	–	–	–	–	–
	16"X ø	99	90	78	75	45	–	–	–	–	–	–	–
	20"X ø	123	116	107	105	81	45	–	–	–	–	–	–
	24"X ø	146	140	132	131	111	82	45	–	–	–	–	–
200psi	30"X ø	209	204	197	188	177	153	116	75	–	–	–	–
	36"X ø	243	236	233	226	217	196	168	135	74	–	–	–
	42"X ø	273	270	265	259	252	234	211	183	133	72	–	–
	48"X ø	301	298	294	289	283	268	249	226	183	131	71	–

NOTES:
1. THE DATA IN THE ABOVE TABLE ARE BASED UPON THE FOLLOWING INSTALLATION CONDITIONS: SOIL TYPE-SAND; TEST PRESSURE-150 PSI/200 PSI; DEPTH OF BURY-3'; TRENCH TYPE-3; SAFETY FACTOR- 1.5; VERTICAL OFFSET-3'; MINIMUM PIPE LENGTH ALONG TEE RUN-5'
2. THE RESTRAINED PIPE LENGTHS APPLY TO DUCTILE IRON AND PVC PIPE.
3. ALL JOINTS BETWEEN UPPER AND LOWER BENDS SHALL BE RESTRAINED.
4. RESTRAINED PIPE LENGTHS APPLY TO PIPE ON BOTH SIDES OF VALVES AND FITTINGS.

V.O.W. CONSTRUCTION STANDARDS & DETAILS

REVISION: JUN. 2005, JAN. 2001, NOV. 1999 — MECHANICAL JOINT RESTRAINT REQUIREMENTS — PAGE No. D5

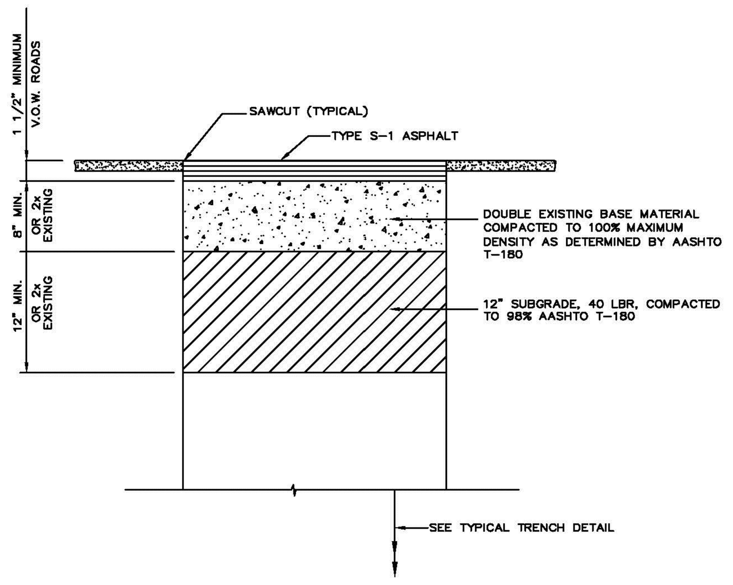

NOTE:

1. FOR ASPHALT DRIVEWAYS, THE SUBBASE SHALL BE 8" MIN.

V.O.W. CONSTRUCTION STANDARDS & DETAILS

REVISION: JAN. 2003, DEC. 2002, NOV. 1999, JULY 1998, JUN. 2005 — PAVEMENT REPLACEMENT DETAIL — PAGE No. D15

1. THE CONTRACTOR SHALL HAVE AVAILABLE AT THE JOB SITE AT ALL TIMES ONE (1) COPY OF THE CONTRACT DOCUMENTS, INCLUDING PLANS, SPECIFICATIONS AND COPIES OF ALL REQUIRED CONSTRUCTION PERMITS.
2. THE CONTRACTOR SHALL CONTACT ALL CONCERNED UTILITIES AT LEAST 48 HOURS IN ADVANCE OF CONSTRUCTION OPERATIONS.
3. THE LOCATION AND SIZE OF ALL EXISTING UTILITIES SHOWN ON THE PLANS ARE APPROXIMATE AND ARE BASED ON THE BEST AVAILABLE INFORMATION. THE CONTRACTOR SHALL BE RESPONSIBLE FOR THE LOCATION OF ALL EXISTING UTILITIES. THE CONTRACTOR SHALL VERIFY ALL UTILITIES BY ELECTRONIC METHOD AND BY HAND EXCAVATION IN COORDINATION WITH ALL UTILITY COMPANIES PRIOR TO BEGINNING ANY CONSTRUCTION OPERATIONS. ANY AND ALL CONFLICTS OF EXISTING UTILITIES WITH PROPOSED IMPROVEMENTS SHALL BE RESOLVED BY THE ENGINEER AND THE VILLAGE PRIOR TO BEGINNING ANY CONSTRUCTION OPERATIONS. THIS WORK BY THE CONTRACTOR SHALL BE CONSIDERED INCIDENTAL TO THE CONTRACT AND NO ADDITIONAL COMPENSATION SHALL BE ALLOWED.
4. IT IS THE CONTRACTOR'S RESPONSIBILITY TO ENSURE HIS COMPLETE FAMILIARITY WITH THE PROJECT SITE AND IT'S COMPONENTS TO INCLUDE SUBSURFACE CONDITIONS OF SOIL AND GROUNDWATER TABLE. BY SUBMITTAL OF A BID FOR THIS PROJECT, THE CONTRACTOR ACKNOWLEDGES HIS COMPLETE UNDERSTANDING AND RESPONSIBILITIES WITH RESPECT TO THE CONSTRUCTION ACTIVITIES REQUIRED UNDER THE SCOPE OF THIS PROJECT.
5. THE CONTRACTOR IS RESPONSIBLE FOR THE PROTECTION AND RESTORATION (IF DAMAGED) OF ALL EXISTING STRUCTURES WITHIN THE CONSTRUCTION LIMITS OF THE PROJECT, INCLUDING BUT NOT LIMITED TO; WALLS, FENCES, POWER POLES, MAIL BOXES, DRAINAGE STRUCTURES, LANDSCAPING, ETC.
6. PRIOR TO COMMENCEMENT OF CONSTRUCTION, THE CONTRACTOR SHALL NOTIFY THE FOLLOWING 48 HOURS BEFORE DIGGING:
   1. FLORIDA POWER & LIGHT
   2. SOUTHERN BELL TELEPHONE
   3. ADELPHIA CABLE TV
   4. SUNSHINE STATE ONE CALL OF FLORIDA INC.
7. VILLAGE OF WELLINGTON (VOW) WRITTEN SPECIFICATIONS AND STANDARD DETAILS (LATEST EDITION) ARE TO BE CONSIDERED PART OF THIS PROJECT AND CONSTRUCTION SHALL BE ENFORCED TO AT LEAST THESE MINIMUM STANDARDS.
8. ALL MATERIAL MUST CONFORM TO APPROVED SHOP DRAWINGS. ANY CHANGES MUST BE APPROVED BY THE ENGINEER AND VOW PRIOR TO INSTALLATION. FAILURE OF THE INSPECTOR TO CALL TO THE ATTENTION OF THE CONTRACTOR ANY ITEM NOT IN CONFORMANCE WITH PLANS AND SPECS SHALL NOT CONSTITUTE ACCEPTANCE OF THE ITEM.
9. VOW REPRESENTATIVES SHALL BE PRESENT DURING ALL OPERATIONS INVOLVING EXISTING UTILITIES.
10. NO CONCRETE THRUST BLOCKS WILL BE ALLOWED. ALL JOINTS SHALL BE MECHANICALLY RESTRAINED AS REQUIRED BY THE VOW.
11. SERVICE INTERRUPTIONS REQUIRE MINIMUM OF TWO (2) WEEKS PRIOR NOTIFICATION.

V.O.W. CONSTRUCTION STANDARDS & DETAILS

REVISION: JAN. 2006, JAN. 2000 — GENERAL CONSTRUCTION NOTES (WATER) — PAGE No. D20

12. ALL PIPING MUST BE INSTALLED DRY.
13. MINIMUM COVER SHALL BE 36 INCHES FROM FINISH GRADE.
    MINIMUM COVER UNDER DITCH/CANAL BOTTOMS SHALL BE 24 INCHES.
    MAXIMUM COVER SHALL BE 42 INCHES FROM FINISHED GRADE.
14. DIP SHALL BE REQUIRED IN THE FOLLOWING CIRCUMSTANCES (WATER MAIN):
    A. WITHIN 10 FEET OF SANITARY AND STORM PIPES.
    B. WITHIN 10 FEET OF STRUCTURES, CANALS OR LAKES.
    C. CROSSINGS OVER AND UNDER SEWERS, CANAL CROSSINGS, GAS AND STORM PIPES WITH LESS THAN 12 INCHES SEPARATION.
    D. BENEATH ALL PAVED AREAS.
    E. WITHIN EASEMENTS.
15. TAPPING SLEEVES & VALVES SHALL BE A MINIMUM OF 3 FEET FROM A PIPE JOINT AND SERVICE TAPS SHALL BE A MINIMUM OF 18 INCHES APART AND 18 INCHES FROM A BELL OR FITTING.
16. AN APPROPRIATELY SIZED SCHEDULE 80 PVC CASING IS REQUIRED FOR ALL SERVICES THAT CROSS UNDER PAVEMENT. ENDS SHALL BE PLUGGED WITH FOAM RUBBER OR APPROVED EQUAL AND SHALL BE LEFT EXPOSED FOR VISUAL INSPECTION - SEE DETAIL 21.
17. APPROPRIATELY MARKED 6 INCH METALLIC BACKED INDICATOR TAPE IS REQUIRED OVER ALL PVC MAINS INSTALLED ONE (1) FOOT BELOW GRADE.
18. ALL FIRE HYDRANTS SHALL MAINTAIN PROPER CLEAR ZONE PER PBC FIRE MARSHAL STANDARDS.
19. PAVEMENT REPLACEMENT, INCLUDING CURB, GUTTERS AND STRIPING SHALL OCCUR WITHIN SEVEN (7) WORKING DAYS FOLLOWING COMPLETION OF OPEN CUT WORK.
20. ALL EXPOSED (ABOVE GRADE) DUCTILE IRON WATER MAIN SHALL BE COLOR CODED TNEMEC SAFETY BLUE. FOR EXPOSED FIRE LINE DUCTILE IRON PIPING COLOR SHALL BE TNEMEC SAFETY RED.
21. ALL BACKFLOW ASSEMBLIES MUST BE REDUCED PRESSURE PRINCIPLE BACKFLOW PREVENTERS (RPZ).
22. FIRE LINE PIPING MUST BE D.I.P. SPECIAL CLASS 53, INSTALLED FROM MAIN TO AND THROUGH BACKFLOW ASSEMBLY.
23. USE OF REPAIR SLEEVES AND / OR REPAIR COUPLINGS IS PROHIBITED WITHOUT PRIOR APPROVAL FROM VILLAGE ENGINEER.
24. ALL MATERIALS FOR CONNECTION TO EXISTING MAINS, I.E. VENT TO ATMOSPHERE INSTALLED, MUST BE PRESENT AT SCHEDULED CONNECTION TIME. IF NOT, CONNECTION WILL BE CANCELLED.

V.O.W. CONSTRUCTION STANDARDS & DETAILS

REVISION: JAN. 2003, DEC. 2002, FEB. 2000, JAN. 2000, JUN. 2005, JAN. 2006, JAN. 2007 — GENERAL CONSTRUCTION NOTES (WATER) — PAGE No. D20A

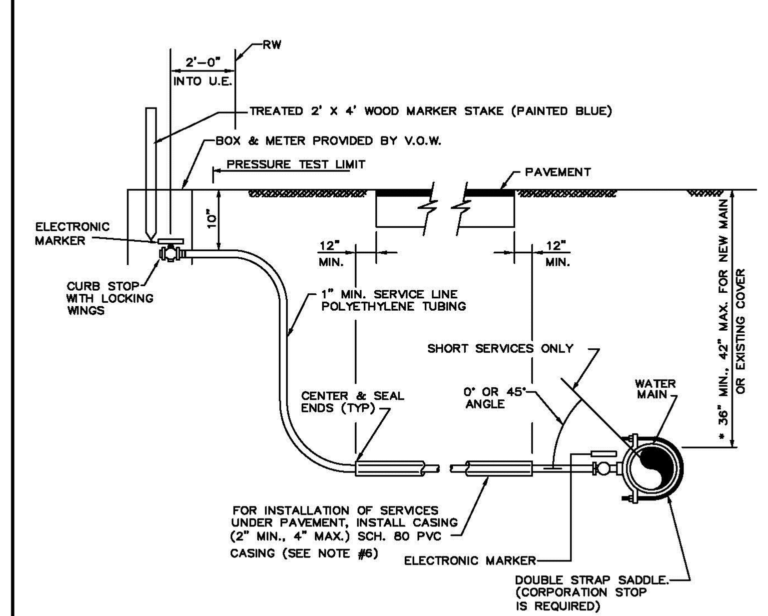

NOTES:

1. SUCCESSIVE TAPS INTO THE WATER MAIN SHALL BE SPACED A MINIMUM OF 18" APART. TAPS SPACED BETWEEN 18" TO 48" SHALL BE OFFSET TO EACH SIDE OF THE MAIN, OR OFFSET 45°.
2. METER BOX SHALL BE SET TO CONFORM TO FINISHED GRADE ADJACENT TO PROPERTY LINE. METER BOX SHALL NOT BE PLACED IN SIDEWALK OR DRIVEWAY AREAS. SERVICE LINES SHALL NOT BE PLACED UNDER DRIVEWAYS.
3. TUBING TO BE POLYETHYLENE
4. ALL 5/8" & 1" METERS REQUIRE A 1" LOCKING METER VALVE RESPECTIVELY
5. MAXIMUM SERVICE LENGTH IS 100' TO METER.
6. SERVICE SIZES
   SINGLE - 1" WITH 2" CASING
   DOUBLE - 1.5" WITH 3" CASING
   QUAD - 2" WITH 4" CASING
   LIFT STATION - 1.5"
   ANY SERVICE EXCEEDING 50' - 1.5"

V.O.W. CONSTRUCTION STANDARDS & DETAILS

REVISION: JUN. 2005, DEC. 2002, NOV. 1999, JULY 1998, JAN. 2007 — TYPICAL SERVICE CONNECTION (UNDERGROUND) FOR 5/8", 1" OR 2" METER — PAGE No. D21

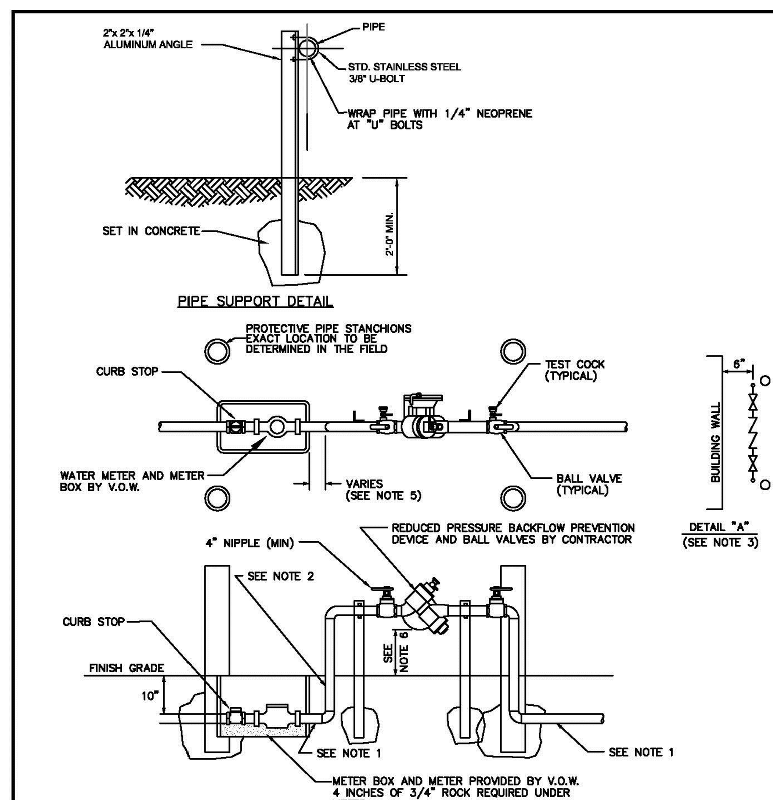

NOTES:

1. TYPE "K" COPPER TUBING (SOFT DRAWN) OR POLYETHYLENE TUBING SDR 9 COPPER TUBE SIZE.
2. BOTH RISERS SHALL BE TYPE "K" COPPER TUBING (HARD DRAWN) WITH COPPER/BRASS "SWEAT" FITTINGS AND ADAPTERS. ONLY LEAD FREE SOLDER AND FLUX SHALL BE PERMITTED.
3. WHEN THE DEVICE IS INSTALLED PARALLEL TO A BUILDING WALL THERE SHALL BE A MIN. OF 6" BETWEEN THE EDGE OF THE DEVICE AND THE BUILDING WALL.
4. BACKFLOW PREVENTION DEVICE SHALL BE EQUIPPED WITH BALL VALVES IN LIEU OF GATE VALVES.
5. BACKFLOW PREVENTOR MUST BE INSTALLED AS CLOSE TO SOURCE OF SUPPLY AS POSSIBLE.
6. 18" MIN. / 30" MAX. FROM LOWEST POINT OF BACKFLOW ASSEMBLY TO FINISH GRADE OR FLOOD PLANE.
7. ALL B.F.D. SHALL BE SIZED TO MATCH METER.
8. ONLY U.S.C. APPROVED DEVICES WILL BE ACCEPTED.

V.O.W. CONSTRUCTION STANDARDS & DETAILS

REVISION: JAN. 2003, DEC. 2002, JAN. 2001, NOV. 1999, JULY 1998, JAN. 2006 — TYPICAL COMMERCIAL METER / BACKFLOW PREVENTION DETAIL (3/4" TO 2") — PAGE No. D24

UTILITY DETAILS I

N.T.S.

16-10

WILLIAMSON DACAR ASSOCIATES© INCORPORATED
Architecture Planning Engineering
ARCHITECTURE / ENGINEERING / PLANNING
15500 LIGHTWAVE DRIVE SUITE 106
CLEARWATER, FL. 33760
PH (727) 725-0951 www.williamsondacar.com

Architect: AA 0002541
Engineering: EB 0006884

HOLLAND ENGINEERING INC.
civil engineers
3900 HOLLYWOOD BLVD, STE. 303 - HOLLYWOOD - FL - 33021
(954)367-0371 . (954)367-0372 Fax
CA 7325
SUSAN C. HOLLAND, PE
Reg. no. 41831

WELLINGTON GREEN PARCEL "F"
PHASE II RETAIL "H" MODIFICATION
2545 SOUTH STATE ROAD 7
WELLINGTON, FLORIDA 33414

Revisions of Drawings

No.	Date	Revisions

Issues of Drawings

No.	Date	Issues
1	06.15.16	100% CD - PERMIT SET

Phase: PHASE
Checked: CHECKED: SH
Drawn: AA

Drawing Tiltle: UTILITY DETAILS I

WDA Proj. No.: 1526-01
Owner Proj. No.:
Scale: N.T.S.
Sheet No. C6.0
No. of Sheets.:

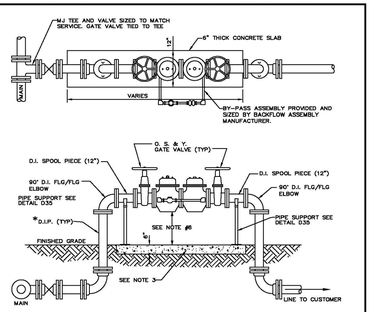

NOTES:

1. ALL PIPE AND FITTINGS SHALL BE CLASS 53 DUCTILE IRON CEMENT LINED.
2. MECHANICAL JOINT FITTINGS SHALL BE REQUIRED UNDERGROUND AND FLANGED FITTINGS FOR ABOVE GROUND USE, NO UNIFLANGES PERMITTED.
3. CONCRETE PAD IS REQUIRED AS SHOWN ON COMPACTED SUBGRADE WITH PIPE SUPPORTS.
4. ONLY U.S.C. APPROVED DEVICES WILL BE ACCEPTED
5. REDUCED PRESSURE ZONE (RPZ) ASSEMBLIES ONLY.
6. 18" MIN. / 30" MAX. FROM LOWEST POINT OF BACKFLOW ASSEMBLY TO FINISH GRADE OR FLOOD PLANE.

* RISER PIPE MUST BE ONE CONTINUOUS PIECE FROM BOTTOM BEND TO TOP BEND.

V.O.W. CONSTRUCTION STANDARDS & DETAILS

REVISION		PAGE No.
JAN. 2003 SEC. 2007 NOV. 1999	JAN. 2006 FIRE LINE BACKFLOW	D26

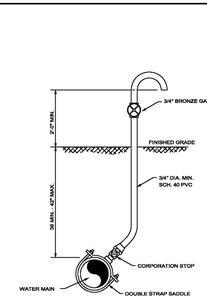

NOTE:

SAMPLE POINT SHOULD BE A SERVICE LINE OR FIRE HYDRANT IF POSSIBLE.

V.O.W. CONSTRUCTION STANDARDS & DETAILS

REVISION		PAGE No.
JAN. 2007 NOV. 1999	SAMPLING POINT (ON MAIN)	D27

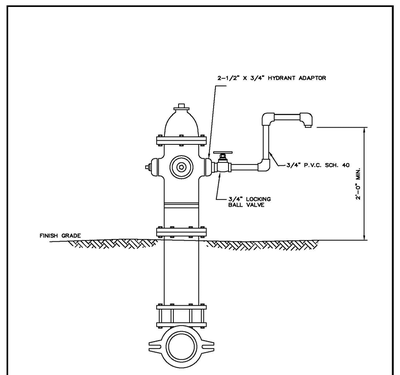

V.O.W. CONSTRUCTION STANDARDS & DETAILS

REVISION		PAGE No.
NOV. 1999	SAMPLING POINT (ON HYDRANT)	D28

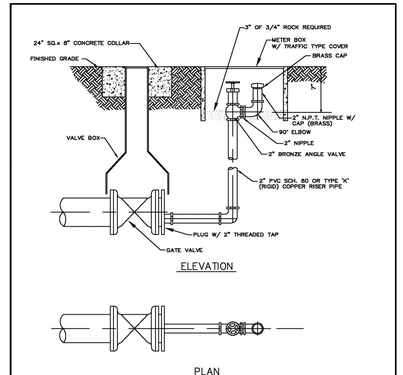

ELEVATION

PLAN

NOTES:

1. GALVANIZED PIPING AND FITTINGS SHALL NOT BE USED ON TEMPORARY OR PERMANENT BLOWOFFS.
2. THE MAIN SHALL BE MECHANICALLY RESTRAINED IN ACCORDANCE WITH THE V.O.W. STANDARDS. THE NUMBER OF PIPE LENGTHS TO BE RESTRAINED SHALL BE PER DETAIL D5.

V.O.W. CONSTRUCTION STANDARDS & DETAILS

REVISION		PAGE No.
JAN. 2006 JAN. 2001 NOV. 1999	TYPICAL TERMINAL END WITH 2" BLOWOFF	D29

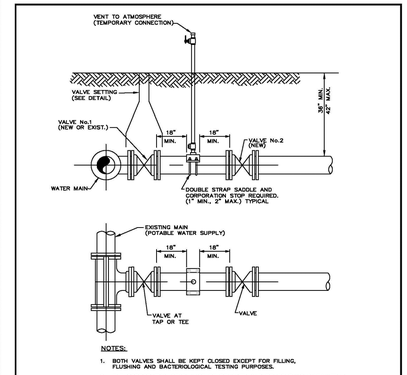

NOTES:

1. BOTH VALVES SHALL BE KEPT CLOSED EXCEPT FOR FILLING, FLUSHING AND BACTERIOLOGICAL TESTING PURPOSES.
2. THE CORPORATION STOP MUST BE REMOVED AND BRASS PLUG INSTALLED IN THE CORPORATION STOP SUCCESSFULL COMPLETION OF ALL TESTING. FILLING AND FLUSHING LOCATIONS SHALL BE COORDINATED BY THE CONTRACTOR, ENGINEER, AND V.O.W.
3. THE V.O.W. SHALL BE NOTIFIED BEFORE FILLING AND FLUSHING VALVES ON EXISTING SYSTEM SHALL BE OPERATED ONLY BY V.O.W. PERSONNEL.
4. PRESSURE TEST PUMP CONNECTS TO SERVICE LINE TAPS OR BLOWOFF. NO EXTRA TAPS ARE PERMITTED UNLESS APPROVAL HAS BEEN BY THE V.O.W.
5. VENT TO ATMOSPHERE SHALL REMAIN OPEN DURING ALL PHASES OF PRESSURE TESTING.

V.O.W. CONSTRUCTION STANDARDS & DETAILS

REVISION		PAGE No.
JAN. 2003 SEC. 2007 FEB. 2006 NOV. 1999 JAN. 2007	DOUBLE VALVE DETAIL	D30

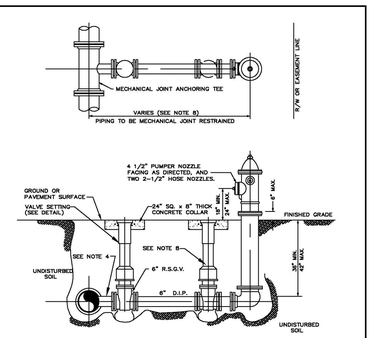

NOTES:

1. HYDRANT SHALL BE INSTALLED PLUMB AND TRUE.
2. THE MODEL AND COLOR HYDRANT SHALL BE PER V.O.W. REQUIREMENTS.
3. VALVE SHALL BE PLACED ADJACENT TO MAIN, TIED TO TEE.
4. MECHANICAL JOINT ANCHORING FITTINGS WILL BE USED AS NOTED.
5. ALL HYDRANTS SHALL BE TEE'D OFF OF MAINS.
6. HYDRANTS SHALL NOT BE PLACED IN SIDEWALKS, ROADWAYS OR BIKEPATHS.
7. ALL JOINTS TO BE MECHANICALLY RESTRAINED.
8. ANY FIRE HYDRANT THAT IS INSTALLED 50 FEET OR MORE FROM THE MAIN WILL REQUIRE AN ADDITIONAL VALVE & BOX AT THE HYDRANT.

V.O.W. CONSTRUCTION STANDARDS & DETAILS

REVISION		PAGE No.
JAN. 2007 JAN. 2001 NOV. 1999 JULY 1998	TYPICAL FIRE HYDRANT ASSEMBLY	D31

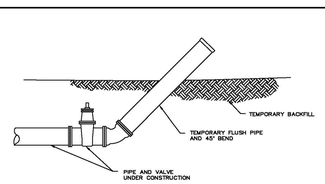

NOTES:

1. UPON COMPLETION OF THE PIPE INSTALLATION FOR ANY SECTION, THE MAINS SHALL BE CANNON FLUSHED TO REMOVE DIRT AND ANY OTHER FOREIGN MATTER BY ACHIEVING A MINIMUM VELOCITY OF 2.5 FEET PER SECOND IN THE PIPE.
2. INSTALL A 45° BEND AND ASSOCIATED PIPING AS SHOWN TO DIRECT THE FLUSHING WATER AWAY FROM THE IMMEDIATE WORK AREA AND EXERCISE DUE CARE SO AS TO ENSURE THAT THE WATER USED IN THE FLUSHING DOES NOT CAUSE A NUISANCE OR INFLICT PROPERTY DAMAGE.
3. BENDS AND PIPING SHALL BE THE SAME SIZE AS THE LINE TO BE FLUSHED.
4. PRIOR TO THE ACTUAL LINE FLUSHING OPERATION. THE CONTRACTOR SHALL PROPERLY NOTIFY THE ENGINEER AND V.O.W. INSPECTOR OF SUCH INTENDED WATER USE.
5. NO EXISTING VALVES SHALL BE TURNED ON OR OFF, EXCEPT BY AUTHORIZED V.O.W. PERSONNEL.
6. FLUSHING SHALL NOT BE ACCOMPLISHED WITHOUT THE ACTUAL PRESENCE OF THE V.O.W. INSPECTOR.
7. AFTER THE LINE UNDER CONSTRUCTION HAS BEEN SUCCESSFULLY FLUSHED THE CONTRACTOR SHALL REMOVE THE TEMPORARY PIPING ARRANGEMENT AND PROCEED WITH THE REMAINING CONSTRUCTION AS SPECIFIED.
8. ALL PIPING SHALL BE MECHANICALLY RESTRAINED IN ACCORDANCE WITH V.O.W. STANDARDS. THE NUMBER OF PIPE LENGTHS TO BE RESTRAINED SHALL BE PER MANUFACTURERS RECOMMENDATION.

V.O.W. CONSTRUCTION STANDARDS & DETAILS

REVISION		PAGE No.
DEC. 2003 NOV. 1999	CANNON FLUSHING DETAIL	D34

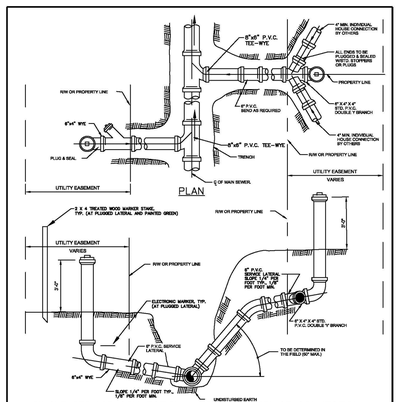

NOTES

1. SERVICE LATERALS SHALL TERMINATE 2' INSIDE U.E.A.T PROPERTY LINE AT A MAXIMUM DEPTH OF 3 FEET, PLUGGED WATERTIGHT AND MARKED WITH A 2"x2" TREATED STAKE AND ELECTRONIC MARKER MARKER (BLUE).
2. THE MINIMUM DIAMETER OF ALL SERVICE LATERALS SHALL BE 6 INCHES.
3. CONNECTION TO VILLAGE LATERAL SHALL BE MADE WITH A CLEANOUT.

V.O.W. CONSTRUCTION STANDARDS & DETAILS

REVISION		PAGE No.
JUN. 2005 DEC. 2003 NOV. 1999 JULY 1998	TYPICAL SEWER SERVICE CONNECTION	D40

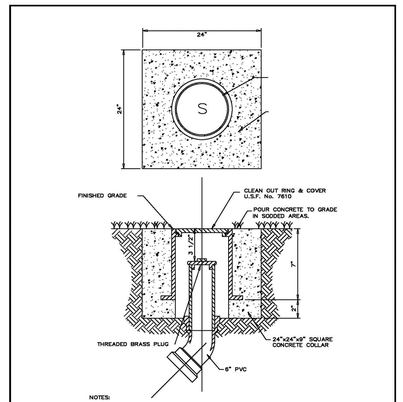

NOTES:

2. ACCEPTABLE MATERIALS ARE SCHEDULE 40 PVC AND SDR.
4. CLEANOUTS TO BE INSTALLED PRIOR TO C/O.

V.O.W. CONSTRUCTION STANDARDS & DETAILS

REVISION		PAGE No.
	CLEANOUT	D-42

THIS DOCUMENT CONTAINS COPYRIGHTED MATERIAL AND TRADE SECRET INFORMATION BELONGING EXCLUSIVELY TO WILLIAMSON DACAR ASSOCIATES, INC. UNAUTHORIZED USE, DISCLOSURE, DOWNLOADING OR DUPLICATION OF ANY OF THE INFORMATION CONTAINED HEREIN MAY RESULT IN LIABILITY UNDER APPLICABLE LAWS.

WILLIAMSON DACAR ASSOCIATES
ARCHITECTURE / ENGINEERING / PLANNING
19500 LIGHTWATER DRIVE SUITE 106
BOCA RATON, FLORIDA 33498
PH (727) 725-0851 www.williamsondacar.com

Architect: AA 0002541
Engineering: EB 0006884

HOLLAND ENGINEERING INC.
civil engineers
3900 HOLLYWOOD BLVD, STE. 303 – HOLLYWOOD – FL – 33021
(954)367-0371 . (954)367-0372 Fax
CA 7325
SUSAN C. HOLLAND, PE
Reg. no. 41831

WELLINGTON GREEN
PARCEL "F"
PHASE II RETAIL "H"
MODIFICATION
2545 SOUTH STATE ROAD 7
WELLINGTON, FLORIDA 33414

Revisions of Drawings

No.	Date	Revisions

Issues of Drawings

No.	Date	Issues
1	06.15.16	100% CD – PERMIT SET

Phase: PHASE
Checked: CHECKED: SH
Drawn: AA

Drawing Title

UTILITY DETAILS II

WDA Proj. No.: 1526-01
Owner Proj. No.:
Scale: N.T.S.

Sheet No.
C6.1
No. of Sheets.:

UTILITY DETAILS II
N.T.S.

GENERAL STRUCTURAL NOTES

DESIGN CRITERIA

D1 ALL WORK SHALL CONFORM TO AT LEAST THE MINIMUM STANDARDS OF THE FLORIDA BUILDING CODE, 5TH EDITION, 2014.

D2 DESIGN LOADS PER FLORIDA BLDG. CODE,
REFER TO SHEET S1.1 FOR GRAVITY LOADS (DL & LL)
WIND DESIGN PER ASCE 7-10. EXPOSURE C, ENCLOSED BLDG.

MAIN BLDG.:
V(ult.)=170 MPH
V(all.)=132 MPH
RISK CATEGORY= II
qh(ult.)=55.3 PSF
qh(all.)=33.2 PSF
Kd=0.85
a=6'-0"

D3 FOUNDATION DESIGN VALUES: 2500 PSF
PER GEOTECHNICAL REPORT AS PREPARED BY:
GFA INTERNATIONAL
DATED: MAY 19th, 2016

D4 TO THE BEST OF THE ENGINEER'S KNOWLEDGE. THE STRUCTURAL PLANS AND SPECIFICATIONS HAVE BEEN DESIGNED IN ACCORDANCE WITH THE FLORIDA BUILDING CODE LATEST EDITION.

GENERAL

G1 PREPARATION OF THE STRUCTURAL DOCUMENTS ASSUMES THE GENERAL CONTRACTOR HAS A MINIMUM OF 5 YEARS EXPERIENCE IN SIMILAR TYPE METHOD OF CONSTRUCTION. PRIOR TO START OF CONSTRUCTION, ANY NOTES OR DETAILS THAT ARE NOT FULLY UNDERSTOOD SHALL BE BROUGHT TO THE A/E FIRM IN WRITING FOR CLARIFICATION.

G2 THE GENERAL CONTRACTOR SHALL REVIEW AND DETERMINE THAT DIMENSIONS ARE COORDINATED BETWEEN ARCHITECTURAL AND STRUCTURAL DRAWINGS PRIOR TO FABRICATION OR START OF CONSTRUCTION.

G3 THE GENERAL CONTRACTOR SHALL PROVIDE ALL MEASURES NECESSARY TO PROTECT THE STRUCTURE, THE WORK PERSONS, AND OTHER PEOPLE DURING CONSTRUCTION. HE SHALL SUPERVISE AND DIRECT THE WORK AND BE RESPONSIBLE FOR ALL CONSTRUCTION.

G4 NO STRUCTURAL MEMBER SHALL BE CUT, NOTCHED OR OTHERWISE REDUCED IN STRENGTH.

G5 THE GENERAL CONTRACTOR SHALL COORDINATE ARCHITECTURAL, MECHANICAL, AND ELECTRICAL DRAWINGS FOR ANCHORED, EMBEDDED, SUPPORTED ITEMS WHICH AFFECT THE STRUCTURAL DRAWINGS AND NOTIFY THE ARCHITECT/ENGINEER OF ANY DISCREPANCIES.

G6 ATTACHMENT OF GLAZING AND DOORS TO BE PER DADE COUNTY - NOA.

SLAB ON GRADE

SG1 UNLESS NOTED OTHERWISE IN THE GEOTECHNICAL REPORT REFERENCED ABOVE COMPACT INTERIOR FILL TO 95% OF MODIFIED PROCTOR MAXIMUM DRY DENSITY (ASTM D1557). SOIL COMPACTION SHALL BE FIELD CONTROLLED BY REPRESENTATIVE TECHNICIAN OF QUALIFIED LABORATORY. EACH LAYER OF FILL SHALL NOT EXCEED 12" THICK AND SHALL BE COMPACTED PRIOR TO PLACEMENT OF NEXT LAYER.

SG2 MINIMUM PLACEMENT OF CONTROL JOINTS SHALL BE AS SET IN THE TABLE BELOW. JOINTS OCCUR IN EACH DIRECTION.

SLAB THK IN.	COLUMN SPACING (FT.) 15' OR LESS	15'-1" TO 32'-0"	32'-1" TO 48'-0"	48'-1" TO 60'-0"
4"	AT COL. GRID	AT COL. GRID & 1/2 WAY BTWN (2 EQ)	AT COL. GRID & @ 1/3 POINTS (3 EQ.)	AT COL. GRID & @ 1/4 POINTS (4 EQ.)
5"	AT COL. GRID	AT COL. GRID & 1/2 WAY BTWN (2 EQ)	AT COL. GRID & 1/2 WAY BTWN (2 EQ)	AT COL. GRID & @ 1/3 POINTS (3 EQ.)
6"	AT COL. GRID	AT COL. GRID & 1/2 WAY BTWN (2 EQ)	AT COL. GRID & 1/2 WAY BTWN (2 EQ)	AT COL. GRID & @ 1/3 POINTS (3 EQ.)

CONCRETE AND REINFORCING

C1 CONCRETE WORK SHALL CONFORM TO ACI CODE REQUIREMENTS FOR REINFORCED CONCRETE (ACI 318-08)

C2 ALL CONCRETE SHALL HAVE A MINIMUM 28 DAY STRENGTH & PROPERTIES AS FOLLOWS:

		SLUMP	MAX. WATER/CMT
FOUNDATIONS SLAB ON GRADE	3000 PSI	6±1"	0.54
BEAMS & COLS	4000 PSI	5±1"	0.54
FILLED CELLS	3000 PSI	9±1"	0.62

C3 CONCRETE MIX DESIGN SUBMITTALS MUST INCLUDE THE AREA IN WHICH THE CONCRETE IS TO BE PLACED (e.g. FOUNDATIONS, SLAB-ON-GRADE, FILLED CELLS, COLUMNS, etc.). FAILURE TO DO SO WILL CAUSE DELAY AND/OR REJECTION OF SUBMITTALS.

C4 REBARS SHALL CONFORM TO ASTM-615 GRADE 60. WELDED WIRE FABRIC SHALL CONFORM TO ASTM A-185.

C5 MIMIMUM COVER FOR REINFORCING SHALL BE AS FOLLOWS UNLESS OTHERWISE NOTED.
FOOTINGS 3"
SLABS ON GRADE 1 1/2" FROM TOP
BEAMS & COLS 1 1/2" (ON TIES)

C6 SPLICES AND ANCHORAGE OF REINFORCING SHALL BE AS FOLLOWS UNLESS OTHERWISE NOTED.
WELDED WIRE FABRIC 6"
ALL OTHER 36 DIA. (12" MIN)

C7 REINFORCEMENT IN WALLS, FOOTINGS AND BEAMS SHALL BE CONTINUOUS AND LAPPED AS SHOWN ON NOTE M11. HOOK AND LAP ALL CORNER AND INTERSECTING BARS. (SEE TYPICAL DETAILS)

C8 TERMINATE ALL DISCONTINUED ELEVATED SLAB TOP BARS WITH A 180 DEGREE STANDARD HOOK UNLESS OTHERWISE NOTED.

C9 CONTINUOUS TOP BARS SHALL BE SPLICED AT MIDSPAN. CONTINUOUS BOTTOM BARS SHALL BE SPLICED AT CENTER-LINE OF SUPPORTS (OR AS SHOWN ON TYPICAL DETAILS).

C10 AT CHANGES IN DIRECTION OF CONCRETE WALLS, STRIP FOOTINGS AND GRADE BEAMS PROVIDE CORNER BARS AT SAME SIZE AND SPACING AS HORIZONTAL BARS. (REFER TO B/S4.0)

MASONRY

M1 MASONRY CONSTRUCTION SHALL CONFORM TO ACI STANDARD BUILDING CODE REQUIREMENTS FOR CONCRETE MASONRY STRUCTURES (ACI 530-05/ASCE 5-05/TMS 402-05), SPECIFICATIONS FOR MASONRY STRUCTURES (ACI 530.1-05 /ASCE 6-05/TMS 602-05) ASTM C476, ASTM C1019, AND NCMA TEK 107.

M2 CONCRETE BLOCKS SHALL CONFORM TO ASTM C-90. (f'm = 1500 PSI) (1900 PSI ON THE NET AREA)

M3 MORTAR SHALL COMPLY WITH ASTM C270, TYPE M OR S. (COMPRESSIVE STRENGTH = 2500 PSI AND 1800 PSI, RESPECTIVELY. SITE TESTED MORTAR CUBES SHALL ACHIEVE A MINIMUM OF 80% OF THE DESIGN COMPRESSIVE STRENGTH)

M4 BLOCK SHALL NOT BE MOISTENED BEFORE GROUTING.

M5 ALL MASONRY CROSS WEBS SHALL BE FULLY BEDDED IN MORTAR AROUND CELLS TO BE GROUTED.

M6 THE MINIMUM CONTINUOUS UNOBSTRUCTED CELL AREA IN CELL TO RECEIVE GROUT MUST BE NOT LESS THAN 2"x3". MORTAR FINS MUST BE REMOVED AS BLOCK PLACEMENT PROCEEDS. MORTAR DROPPINGS MUST BE KEPT OUT OF CELLS WHICH ARE TO BE GROUTED.

M7 REINFORCE WALLS WITH LADDER TYPE (ASTM A-82, #9 GAGE WIRE) REINFORCEMENT EQUAL TO DURO-WALL IN BED JOINTS AT 16" OC UNO, MEASURED VERTICALLY PLACE PER MFR INSTR. LAP ALL HORIZONTAL JOINT REINFORCING 8", MIN. EXTEND HORIZONTAL REINFORCEMENT 4 INCHES INTO CONC. COLS. OR TIE COLS.

M8 WHERE SHOWN, CELLS OF BLOCK MASONRY SHALL BE FILLED WITH GROUT WITH MINIMUM COMPRESSIVE STRENGTH OF 3000 PSI AT 28 DAYS, AND MEET ASTM C476. GROUT SHALL BE PROVIDED BY CONCRETE SUPPLIER FROM THEIR BATCH PLANT WITH A SLUMP OF 8" TO 10". JOB SITE MIXING OF GROUT SHALL NOT BE PERMITTED. TESTING SHALL CONFORM TO ASTM C1019.

M9 GROUT FOR FILLED CELLS SHALL BE POURED OR PUMPED IN LIFTS NOT TO EXCEED FOUR (4) FEET IN HEIGHT, AND A MAX POUR OF 12 FT. FILLED CELLS SHALL BE CONSOLIDATED AT TIME OF POURING BY RODDING OR VIBRATING BETWEEN LIFTS.

M10 PROVIDE KNOCK-OUT CMU AT BASE OF EACH FILLED CELL TO ALLOW VISUAL VERIFICATION OF COMPLETE GROUT PENETRATION (FOR LIFTS OF 5'-0" OR LESS, A KNOCK-OUT AT BASE OF LIFT WILL NOT BE REQUIRED).

M11 VERTICAL REINFORCING MUST HAVE A MINIMUM CLEARANCE OF 1/2" TO INSIDE FACE. MIN VERTICAL BAR LAP = 48 x BAR DIAMETER. VERTICAL REINFORCEMENT IN WALLS SHALL BE SECURED AND LATERALLY SUPPORTED AGAINST DISPLACEMENT AT INTERVALS NOT EXCEEDING 192 x BAR DIAMETER NOR 10 FT.

M12 GROUT PLACEMENT STOPPED FOR (1) HOUR OR MORE SHOULD BE STOPPED (1 1/2") BELOW THE TOP OF THE MASONRY UNIT TO PROVIDE A KEY FOR SUBSEQUENT GROUTING.

M13 SEE FOUNDATION PLANS FOR ALL VERT REINFORCING. TYP VERTICAL REINFORCING SIZE & SPACING SHALL BE ABOVE AND BELOW ALL WALL OPENINGS.

M14 TEMPORARY BRACING AND SHORING OF WALLS TO PROVIDE STABILITY DURING CONSTRUCTION TO BE THE RESPONSIBILITY OF THE CONTRACTOR.

M15 MASONRY CONSTRUCTION MATERIALS AND INSPECTIONS SHALL CONFORM TO ALL REQUIREMENTS OF "SPECIFICATIONS FOR MASONRY STRUCTURES (ACI-ASCE 530.1)" EXCEPT AS MODIFIED BY THE REQUIREMENTS OF THESE DOCUMENTS.

M16 PROVIDE FILLED PRECAST U-LINTELS WITH (1) #5 CONT AT ALL OPENINGS WHERE CONCRETE BEAMS ARE NOT SHOWN OR NOTED. MINIMUM UNFILLED LINTEL CAPACITY = 400 lb/LF FOR SPAN INDICATED.

M17 STOPPING AND RESUMING WORK: RACK BACK 1/2-UNIT LENGTH IN EACH COURSE. DO NOT TOOTH. CLEAN EXPOSED SURFACES OF SET MASONRY WET UNITS LIGHTLY (IF REQ'D) AND REMOVE LOOSE MAS UNITS AND MORTAR PRIOR TO LAYING FRESH MASONRY.

M18 REINFORCE MASONRY OPENINGS GREATER THAN 1'-0" WIDE, WITH HORIZ JT REINF PLACED IN (2) HORIZ JT'S APPROXIMATELY 8" APART, IMMEDIATELY ABOVE THE LINTEL AND IMMEDIATELY BELOW THE SILL. EXTEND REINFORCING A MINIMUM OF 2'-0" BEYOND JAMBS OF THE OPENING EXCEPT AT CONTROL JOINTS. SEE PLAN FOR ADDITIONAL REQUIREMENTS.

M19 DO NOT APPLY UNIFORM LOADS TO MASONRY WALLS FOR (3) DAYS.

M20 DO NOT APPLY CONCENTRATED LOADS TO MASONRY WALLS FOR (7) DAYS.

M21 EXTEND ALL VERTICAL WALL REINFORCEMENT TO WITHIN 2" OF TOP OF WALL OR BEAM UNLESS NOTED OTHERWISE. TERMINATE REINFORCING WITH STANDARD ACI HOOK.

M22 CONTROL JOINT DETAIL

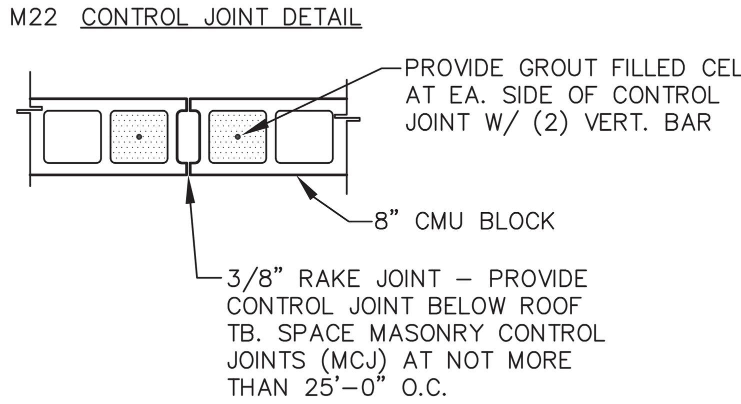

STRUCTURAL STEEL

SS1 GENERAL CONTRACTOR SHALL ENGAGE A CERTIFIED TESTING AGENCY TO PERFORM INDUSTRY STANDARD INSPECTIONS TO ENSURE CONFORMANCE WITH PLANS AND SPECIFICATIONS (IF PROVIDED). SUBMIT REPORTS TO ARCHITECT AND ENGINEER.

SS2 STEEL WORK SHALL CONFORM TO THE AISC "SPECIFICATIONS" FOR THE DESIGN, FABRICATION AND ERECTION OF STRUCTURAL STEEL BUILDINGS", LATEST EDITION.

SS3 STEEL TUBING SHALL CONFORM TO ASTM A500 GRADE B.

SS4 STRUCTURAL WF SHAPES SHALL BE TO ASTM A572 Fy=50KSI, UNLESS NOTED OTHERWISE. ALL OTHER SHAPES SHALL BE A36. ALL STRUCTURAL STEEL SHALL BE DOMESTICALLY PRODUCED.

SS5 BRACE AND MAINTAIN ALL STEEL IN ALIGNMENT UNTIL OTHER PARTS OF CONSTRUCTION NECESSARY FOR PERMANENT SUPPORT ARE COMPLETED. CONTRACTOR SHALL BE RESPONSIBLE FOR INSTALLING TEMPORARY SHORING AS REQUIRED FOR THE STABILITY OF THE STEEL FRAME UNTIL ALL STRUCTURAL ELEMENTS HAVE BEEN COMPLETED AND BUILDING IS ENCLOSED.

SS6 ALL WELDING SHALL CONFORM TO THE REQUIREMENTS OF "THE STANDARD CODE FOR WELDING IN BUILDING CONSTRUCTION" OF THE AMERICAN WELDING SOCIETY. WELDING ELECTRODES SHALL BE E70XX-LOW HYDROGEN FOR SHIELD AND METAL ARC WELDING.

SS7 GROUT FOR COLUMN BASE PLATES AND PRESET BEARING PLATES SHALL BE NON-SHRINK, NON-METALLIC GROUT. (5000 PSI MIN)

SS8 SUBMIT SHOP DRAWINGS INDICATING ALL SHOP AND ERECTION DETAILS INCLUDING PROFILES, SIZES, SPACING AND LOCATIONS OF STRUCTURAL MEMBERS, CONNECTION ATTACHMENTS, FASTENERS, LOADS AND TOLERANCES.

SS9 ALL WELDED CONN. SHALL BE 1/4" FILLET ALL AROUND, UNO. ALL BOLTED CONN. SHALL BE 3/4"ø A325 BOLTS, UNO.

SS10 STEEL PAN STAIRS SHALL BE DESIGNED BY THE FABRICATOR AND SHOP DRAWINGS SHALL BE SIGNED AND SEALED BY AN ENGINEER REGISTERED IN THE SAME STATE AS PROJECT LOCATION. DESIGN FOR 100 PSF LIVE LOAD.

SS11 ALL STEEL EXPOSED TO WEATHER SHALL HAVE ZINC RICH PRIMER

STRUCTURAL METAL STUDS

SMS1. METAL STUD VERTICAL FRAMING SIZES TO BE PER SECTIONS. MAX SPACING TO BE 24" O.C.

SMS2. SEE SHEETS S3.0 AND S3.1 FOR SHEATHING REQUIREMENTS.

SMS3. PROVIDE MECHANICAL BRIDGING AT 4'-0" O.C. VERTICAL SPACING. -REFER TO STUD MFR'S STANDARD DETAILS FOR TYPICAL BRIDGING TYPES AND INSTALLATION METHODS.

SMS4. MINIMUM BACK- TO BACK STUD CONNECTIONS TO BE WITH (2) # 10 TEKS @ 16" O.C. VERT. SPACING.

SMS5. CONNECTING CLIP ANGLE GAGE TO MATCH HEAVIEST GAGE OF CONNECTING MATERIAL U.N.O..

METAL DECKING

MD1 ROOF DECKING SHALL CONFORM TO THE REFQUIREMENTS OF THE STEEL DECK INSTITUTE AND SHALL BE 1.5" TYPE "B" GALV. G90, METAL ROOF DECK. REFER TO ROOF PLAN FOR DECK GAGE.

MD2 UNLESS OTHERWISE NOTED ON ROOF FRAMING PLAN, ATTACH METAL ROOF DECK USING 5/8"ø PUDDLE WELDS IN ACCORDANCE WITH SDI PATTERN 36/7 AT ALL SUPPORTS. USE (9) #10 TEKS SIDELAP SCREW FASTENERS, EQUALLY SPACED BETWEEN SUPPORTS.

MD3 FRAME ALL ROOF OPENINGS LARGER THAN 12 SQUARE INCHES WITH STEEL FRAMING. (L 2 1/2"x2 1/2"x1/4" TYPICAL)

EXPANSION ANCHORS

EA1. CARBON STEEL EXPANSION ANCHORS SHALL HAVE A ONE PIECE ANCHOR BODY WITH A LENGTH IDENTIFICATION CODE. THE ANCHORS SHALL HAVE AN EXPANSION MECHANISM WHICH CONSISTS OF A PAIR OF INTERLOCKING INDEPENDENT WEDGES. CARBON STEEL COMPONENTS SHALL BE PLATED ACCORDING TO ASTM SPECIFICATION B 633. EXPANSION ANCHORS MUST MEET THE DESCRIPTION IN FEDERAL SPECIFICATION FF-S-325 FOR CONCRETE EXPANSION ANCHORS.

EA2. EXPANSION ANCHORS SHALL BE INSTALLED PER MANUFACTURERS RECOMMENDATIONS.

EA3. EXPANSION ANCHORS SHALL HAVE A MINIMUM ULTIMATE TENSILE AND SHEAR LOADS (LBS) AS SHOWN IN SCHEDULE BELOW:

DIA.	EMBEDMENT (IN)	f'c=3,000 psi TENSILE	f'c=3,000 psi SHEAR	f'c=4,000 psi TENSILE	f'c=4,000 psi SHEAR	INSTALLATION TORQUE (ft/lbs)
1/2"	2 1/4"	4925	7360	5450	7360	65
	3 1/2"	8000	9200	9000	9200	
	6"	8650	9200	9500	9200	
5/8"	2 3/4"	7000	11500	8000	11500	110
	4"	10670	14200	12350	14200	
	7"	13000	14200	14000	14200	
3/4"	3 1/4"	8700	15500	10000	15500	235
	4 3/4"	15500	19200	18000	19200	
	8"	18500	19200	22000	19200	
1"	4 1/2"	15200	28500	17500	30500	450
	6"	22500	34500	26500	34500	
	9"	28750	34500	32500	34500	

STEEL JOISTS

SJ1 GENERAL CONTRACTOR SHALL ENGAGE A CERTIFIED TESTING AGENCY TO PERFORM INDUSTRY STANDARD INSPECTIONS TO ENSURE CONFORMANCE WITH PLANS AND SPECIFICATIONS (IF PROVIDED). SUBMIT REPORTS TO ARCHITECT AND ENGINEER.

SJ2 ALL DESIGN, FABRICATION AND ERECTION OF STEEL JOISTS AND BRIDGING SHALL BE IN STRICT ACCORDANCE WITH THE CURRENT SPECIFICATIONS OF STEEL JOIST INSTITUTE AND RECOMMENDED CODE OF STANDARD PRACTICE.

SJ3 THE ENDS OF ALL BRIDGING LINES TERMINATING AT WALLS OR BEAMS SHALL BE ANCHORED TO THE WALL OR BEAM.

SJ4 ALL STEEL JOISTS ARE TO BE CAMBERED AS SPECIFIED BY SJI.

SJ5 PROVIDE BOTTOM AND/OR TOP CHORD EXTENSIONS AS SHOWN ON DRAWINGS.

SJ6 UNLESS NOTED OTHERWISE, MINIMUM JOIST BEARING SHALL BE 2 1/2" ON A STEEL MEMBER OR EMBED PLATE.

SJ7 BRIDGING SHALL BE FURNISHED AND INSTALLED TO MEET THE SIZE AND SPACING REQUIREMENTS OF THE SJI STANDARD SPECIFICATIONS FOR OPEN WEB STEEL JOISTS. ALL BRIDGING AND BRIDGING ANCHORS SHALL BE COMPLETELY INSTALLED BEFORE CONSTRUCTION LOADS ARE PLACED ON THE JOISTS. THE LAST TWO JOIST SPACES IN A LINE OF BRIDGING SHALL BE "X" TYPE. ALL JOISTS 40'-0" OR LONGER REQUIRE A ROW OF BOLTED BRIDGING TO BE IN PLACE BEFORE SLACKENING OF HOISTING LINES. OTHER JOISTS REQUIRE SIMILAR BRIDGING CONSULT LATEST SJI SPECIFICATIONS.

SJ8 ALL HANGERS TO SUPPORT MECHANICAL EQUIPMENT, ETC. TO BE SUPPORTED BY THE BOTTOM CHORD OF JOISTS SHALL BE LOCATED AT THE PANEL POINT OF THE JOIST. IF HANGERS MUST BE LOCATED BETWEEN PANEL POINTS, PROVIDE JOIST STIFFENERS. L1 1/2 x 1 1/2 x 3/16 JOIST STIFFENERS MUST BE INSTALLED FROM HANGER TO OPPOSITE CHORD PANEL POINT BEFORE LOAD IS APPLIED.

SJ9 CONTRACTOR TO FURNISH BAR JOIST CERTIFICATIONS SIGNED AND SEALED BY AN ENGINEER REGISTERED IN THE SAME STATE AS THE PROJECT LOCATION.

SJ10 FOR NET UPLIFT SEE NET UPLIFT PLAN ON SHEET S2.1 PROVIDE UPLIFT BRIDGING.

SJ11 ALL SPRINKLER AND ROOF DRAIN PIPES MUST BE SUPPORTED NO FURTHER THAN 3" FROM THE JOIST TOP CHORD PANEL POINTS. THIS WILL BE STRICTLY ENFORCED. WHEN PIPES ARE PERPENDICULAR TO JOISTS, HANGERS SHALL BE PROVIDED EVERY OTHER JOIST (APPROX 10'-0" OC). WHEN PIPES ARE PARALLEL TO JOISTS, TWO CASES EXIST. FIRST, PIPES THAT ARE 4" AND LESS MAY BE SUPPORTED BY A SINGLE JOIST WITH HANGERS NOT TO EXCEED 10'-0" OC. SECOND, PIPES THAT ARE LARGER THAN 4" MUST BE CENTERED BETWEEN TWO JOISTS AND SUPPORTED FROM L4x4x5/16 ANGLE BEARING ON JOIST TOP CHORD PANEL POINTS WITH SPACING NOT TO EXCEED 10'-0" OC. GENERAL CONTRACTOR SHALL COORDINATE THESE REQUIREMENTS WITH THE APPROPRIATE TRADES.

SJ12 ALL ITEMS SUSPENDED FROM JOISTS (i.e. CATWALKS, BALCONIES, OPERABLE PARTITIONS, etc...) SHALL BE INSTALLED AFTER DEAD LOAD HAS BEEN APPLIED.

JOIST BRIDGING NOTES:

JB1 BRIDGING STANDARD WITH THE MANUFACTURER AND COMPLYING WITH THE STEEL JOIST INSTITUTE STANDARD SPECIFICATIONS LOAD TABLES & WEIGHT TABLES OF THE LATEST ADOPTION SHALL BE USED FOR BRIDGING ALL JOISTS FURNISHED BY THE MANUFACTURER. POSITIVE ANCHORAGE SHALL BE PROVIDED AT THE ENDS OF EACH BRIDGING ROW AT BOTH TOP AND BOTTOM CHORDS.

JB2 FOR "K" AND "LH" SERIES JOISTS HORIZONTAL BRIDGING IS RECOMMENDED FOR SPANS UP TO AND INCLUDING 60 FEET EXCEPT WHERE THE STEEL JOIST INSTITUTE STANDARD SPEC LOAD TABLES & WEIGHT TABLES REQUIRE BOLTED DIAGONAL BRIDGING FOR ERECTION STABILITY.

JB3 "LH" AND "DLH" SERIES JOISTS EXCEEDING 60 FEET IN LENGTH SHALL HAVE BOLTED DIAGONAL BRIDGING FOR ALL ROWS.

JB4 REFER TO SJI SECTION 6 IN THE "K" SERIES SPECIFICATIONS AND SECTION 105 IN THE "LH" AND "DLH" SERIES SPECIFICATIONS FOR ERECTION STABILITY REQUIREMENTS

JB5 REFER TO APPENDIX E FOR OSHA STEEL JOIST ERECTION STABILITY REQUIREMENTS.

JB6 HORIZONTAL BRIDGING SHALL CONSISTS OF CONTINUOUS HORIZONTAL STEEL MEMBERS. THE l/r RATIO FOR HORIZONTAL BRIDGING SHALL NOT EXCEED 300.

JB7 DIAGONAL CROSS BRIDGING CONSISTING OF ANGLES OR OTHER SHAPES CONNECTED TO THE TOP AND BOTTOM CHORDS, OF "K", "LH", AND "DLH" SERIES JOISTS SHALL BE USED WHEN REQUIRED BY THE APPLICABLE STEEL JOIST INSTITUTE STANDARD SPECIFCATIONS LOAD TABLES AND WEIGHT TABLES OF LATEST ADOPTION.

JB8 DIAGONAL BRIDGING, WHEN USED, SHALL HAVE AN l/r RATIO < 200.

JB9 WHEN BOLTED DIAGONAL ERECTION BRIDGING IS REQUIRED, THE FOLLOWING SHALL APPLY:
A. THE BRIDGING SHALL BE INDICATED ON THE JOIST LAYOUT PLAN
B. THE JOIST LAYOUT PLAN SHALL BE THE EXCLUSIVE INDICATOR FOR THE PROPER PLACEMENT OF THIS BRIDGING.
C. SHOP INSTALLED BRIDGING CLIPS, OR FUNCTIONAL EQUIVALENT SHALL BE PROVIDED WHERE THE BRIDGING BOLTS TO THE STEEL JOISTS.
D. WHEN TWO PIECES OF BRIDGING ARE ATTACHED TO THE STEEL JOIST BY A COMMON BOLT, THE NUT THAT SECURES THE FIRST PIECE OF BRIDGING SHALL NOT BE REMOVED FROM THE BOLT FOR THE ATTACHMENT OF THE SECOND PIECE.
E. BRIDGING ATTACHMENTS SHALL NOT PROTRUDE ABOVE THE TOP CHORD OF THE STEEL JOISTS.

JB10 PROVIDE UPLIFT BRIDGING AT FIRST BOTTOM CHORD PANEL POINT EACH END OF JOIST. REFER TO SECTION B/S4 FOR UPLIFT BRIDGING CONNECTION DETAILS

JB11 DO NOT WELD BRIDGING TO JOIST WEB MEMBERS. DO NOT HANG ANY MECHANICAL, ELECTRICAL, PLUMBING, ETC FROM BRIDGING

JB12 BRIDGING LEGEND FOR PLAN BELOW:
Ⓐ HORIZONTAL BRIDGING ATTACHED TO TOP AND BOTTOM CHORD
Ⓑ BOLTED OR WELDED CROSS BRIDGING AS SHOWN
Ⓒ SINGLE LINE HORIZONTAL UPLIFT BRIDGING

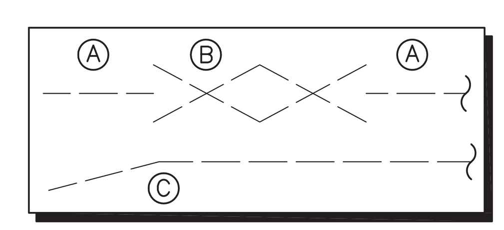

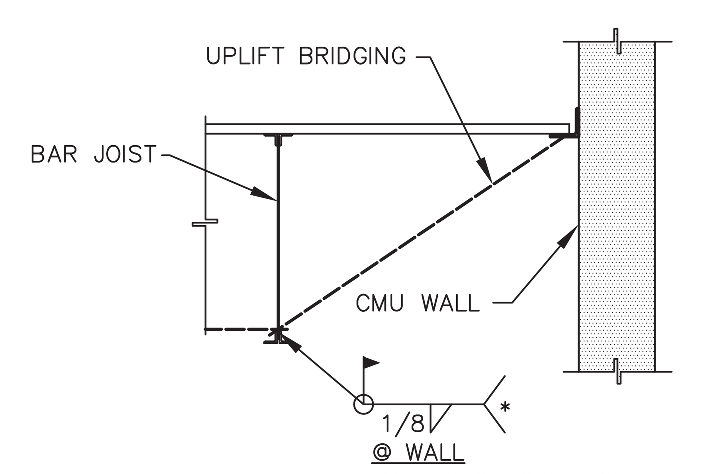

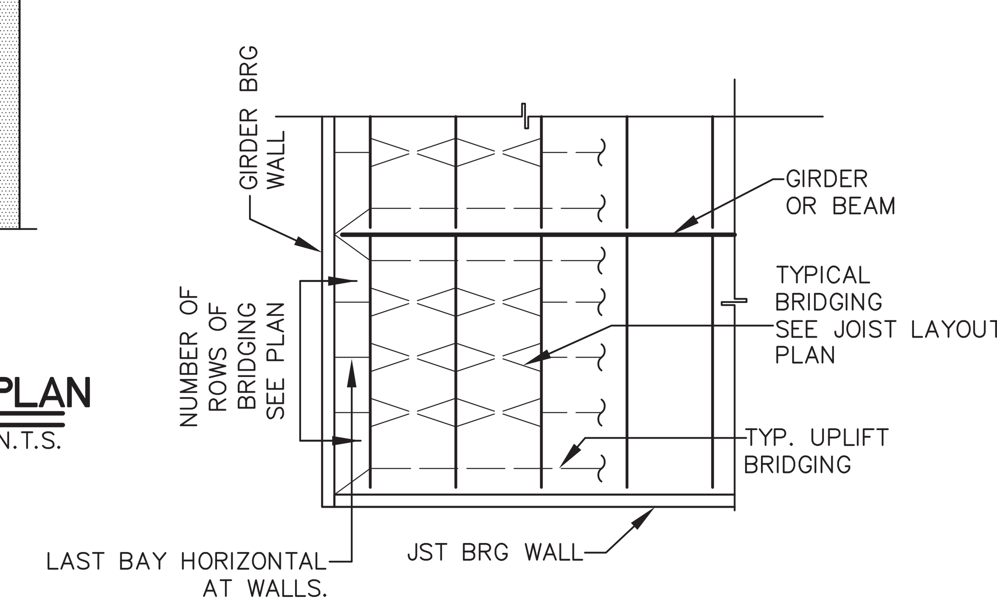

A BRIDGING DETAILS AND PLAN
SCALE: N.T.S.

STRUCTURAL ABBREVIATIONS

AB	ANCHOR BOLT
ABV	ABOVE
A.C.I.	AMERICAN CONCRETE INSTITUTE
ADD'L	ADDITIONAL
AFF	ABOVE FINISH FLOOR
AGGR	AGGREGATE
A.I.S.C.	AMERICAN INSTITUTE OF STEEL CONSTRUCTION
A.I.S.I.	AMERICAN IRON AND STEEL INSTITUTE
AL	ALUMINUM
ALT	ALTERNATE
ARCH	ARCHITECT(URAL)
A.S.T.M.	AMERICAN SOCIETY OF TESTING MATERIALS
A.W.S.	AMERICAN WELDING SOCIETY
B/	BOTTOM OF
BB	BOND BEAM
BLDG	BUILDING
BLW	BELOW
BM	BEAM
BOT	BOTTOM
BP	BASE PLATE
BRDG	BRIDGING
BRG	BEARING
BRK	BRICK
BS	BOTH SIDES
BTJ	BOLTED TIE JOIST
BTWN	BETWEEN
C/C	CENTER TO CENTER
CANT	CANTILEVER
CB	CONCRETE BEAM
CC	CONCRETE COL
CIP	CAST IN PLACE
CJ	CONSTRUCTION JOINT OR CONTROL JOINT
CL	CENTERLINE
CLR	CLEAR(ANCE)
CM	CONCRETE MASONRY
CMU	CONCRETE MASONRY UNIT
COL	COLUMN
CONC	CONCRETE
CONN	CONNECTION
CONT	CONTINUOUS
CONTR	CONTRACTOR
CSK	COUNTER SINK
CTR	CENTER
CTR'D	CENTERED
DIA	DIAMETER
DL	DEAD LOAD
DN	DOWN
DTL	DETAIL
DWG	DRAWING
DWL	DOWEL
EA	EACH
EE	EACH END
EF	EACH FACE
EJ	EXPANSION JOINT
ENG	ENGINEER
EL	ELEVATION
EQ	EQUAL
EQ SP	EQUAL SPACE(S) (ING)
ES	EACH SIDE
EW	EACH WAY
EXT	EXTERIOR
F/	FACE OF
FD	FLOOR DRAIN
FDN	FOUNDATION
FIN	FINISH
FL	FLOOR
FLG	FLANGE
FS	FAR SIDE
FT	FOOT
FTG	FOOTING
GA	GAGE, GAUGE
GALV	GALVANIZE
GB	GRADE BEAM
GC	GENERAL CONTRACTOR
GLB	GLU-LAM BEAM
GR	GRADE
HC	HOLLOW CORE
HK	HOOK
HORIZ	HORIZONTAL
HP	HIGH POINT
HS	HEADED STUD
ID	INSIDE DIAMETER
IF	INSIDE FACE
INT	INTERIOR
JST	JOIST
K	KIP
KO	KNOCK OUT
LG	LONG
LL	LIVE LOAD
LLH	LONG LEG HORIZONTAL
LLV	LONG LEG VERTICAL
LNTL	LINTEL
LSL	LONG SLOTTED HOLES
LONG	LONGITUDINAL
LP	LOW POINT
MAS	MASONRY
MAX	MAXIMUM
MBM	METAL BUILDING MFR
MC	MOMENT CONNECTION
MCJ	MASONRY CONTROL JT
MECH	MECHANICAL
MEZZ	MEZZANINE
MFR	MANUFACTURE(ER)
MIN	MINIMUM
MO	MASONRY OPENING
MS	METAL STUD
MTL	METAL
NS	NEAR SIDE
NTS	NOT TO SCALE
OA	OVERALL
OC	ON CENTER
OD	OUTSIDE DIA.
OF	OUTSIDE FACE
OPNG	OPENING
OPP	OPPOSITE
PAF	POWDER ACTUATED FASTENERS
PERP	PERPENDICULAR
PC	PRECAST
PL	PLATE
PLYWD	PLYWOOD
PNL	PANEL
PSF	POUNDS PER SQUARE FOOT
PSI	POUNDS PER SQUARE INCH
PTN	PARTITION
R	RADIUS
REF	REFERENCE
REINF	REINFORCE(D) (ING)
REQ	REQUIRE
REQ'D	REQUIRED
RF	ROOF
RTN	RETURN
RW	RETAINING WALL
SCH	SCHEDULE
SE	SLAB EDGE
SECT	SECTION
SHT	SHEET
SIM	SIMILAR
SJ	SAWCUT JOINT
SJI	STEEL JOIST INSTITUTE
SL	SLOPE
SP	SPACE(S)
SPECS	SPECIFICATIONS
SQ	SQUARE
SS	STAINLESS STEEL
STD	STANDARD
STL	STEEL
STR	STRENGTH
STRL	STRUCTURAL
SW	SHEAR WALL
SYMM	SYMMETRICAL
SYP	SOUTHERN YELLOW PINE
TB	TIE BEAM
T&B	TOP & BOTTOM
TC	TIE COLUMN
TDS	TURN DOWN SLAB
TEMP	TEMPERATURE
THK	THICK
THNS	THICKEN SLAB
TOP'G	TOPPING
TYP	TYPICAL
T/	TOP OF
UNO	UNLESS NOTED OTHERWISE
VERT	VERTICAL
WF	WALL FOOTING
WO	WINDOW OPENING (MASONRY)
WP	WORKING POINT
WS	WATERSTOP
WWF	WELDED WIRE FABRIC
W/	WITH

JOHNSON STRUCTURAL GROUP
E.B. #00008893
MARK JOHNSON, P.E. #51983, SECB
3500 N.W. Boca Raton Blvd. Suite #618
Boca Raton, FL. 33431
(P)(561) 982-8999 (F)(561) 982-8899
EMAIL: mark@johnsonstructural.com
WWW.JOHNSONSTRUCTURAL.COM
COPYRIGHT © 2016, JOHNSON STRUCTURAL GROUP, INC.

Architect: AA 0002541
Engineering: EB 0006884

MARK JOHNSON LICENSE NO. 51983 STATE OF FLORIDA PROFESSIONAL ENGINEER

Digitally signed by Mark Johnson, PE 51983
Date: 2016.06.15 08:43:13 -04'00'

WELLINGTON GREEN PARCEL "F"
PHASE II RETAIL "H" MODIFICATION
PETITION NO. 16-18 (2016-08 ASA 53)
2545 SOUTH STATE ROAD 7
WELLINGTON, FLORIDA 33414

Revisions of Drawings

No.	Date	Revisions

Issues of Drawings

No.	Date	Issues
1	06.15.16	100% CD - PERMIT SET

Phase:
Checked:
Drawn: N.T.S.
Drawing Title
STRUCTURAL NOTE SHEET

WDA Proj. No.: 1526-01
Owner Proj. No.:
Scale:
Sheet No.
S1.0
No. of Sheets.:

THIS DOCUMENT CONTAINS COPYRIGHTED MATERIAL AND TRADE SECRET INFORMATION BELONGING EXCLUSIVELY TO WILLIAMSON DACAR ASSOCIATES, INC. ANY UNAUTHORIZED USE, DISCLOSURE, DISSEMINATION OR DUPLICATION OF ANY OF THE INFORMATION CONTAINED HEREIN MAY RESULT IN LIABILITY UNDER APPLICABLE LAWS.

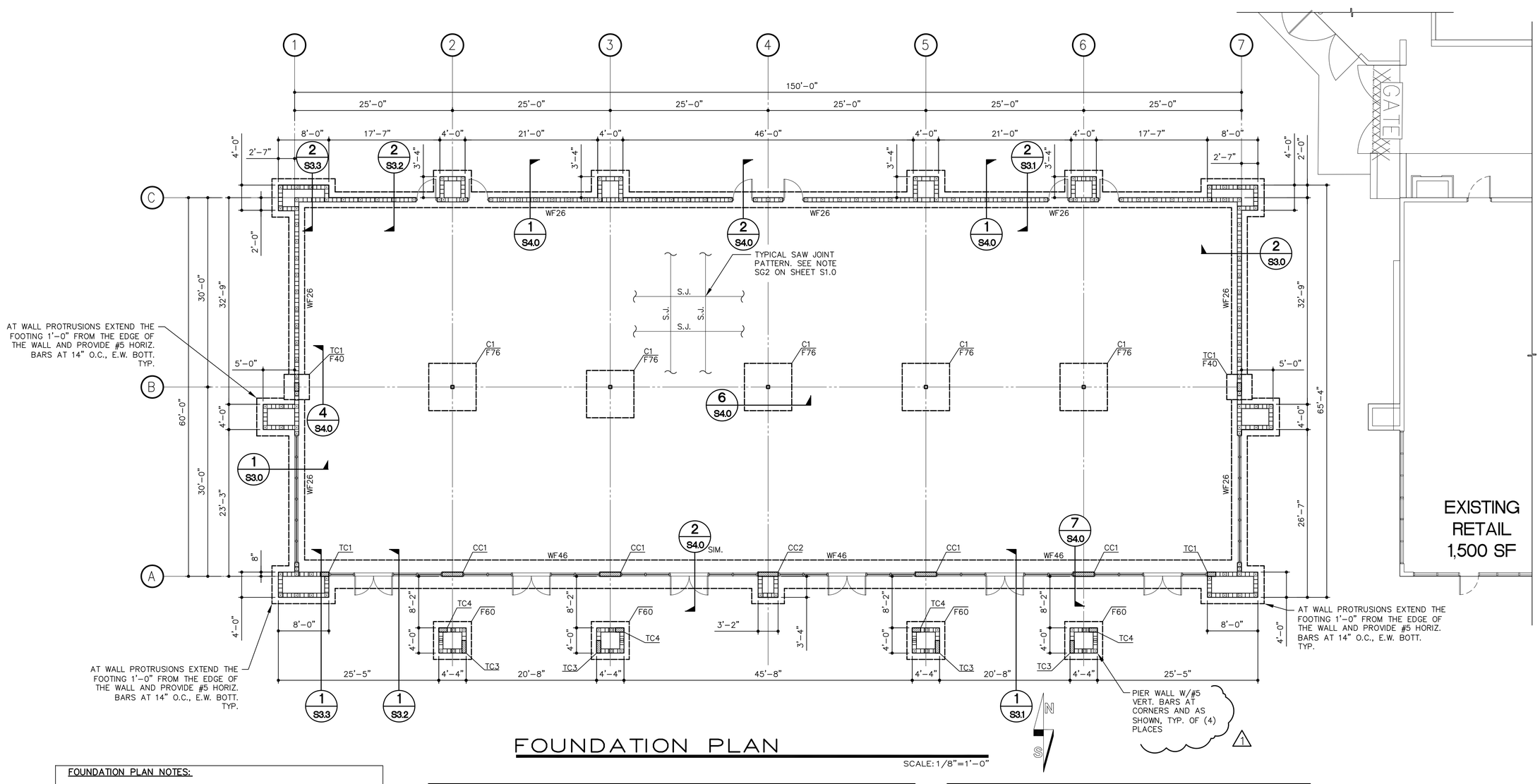

FOUNDATION PLAN

SCALE: 1/8"=1'-0"

FOUNDATION PLAN NOTES:

FP1. FLOOR SLAB SHALL BE 4" THICK CONCRETE REINFORCE W/6x6 W2.1xW2.1 WWF OVER 10 MIL VAPOR BARRIER ON COMPACTED TERMITE TREATED SUBGRADE, TYP. UNO. SEE NOTE SG2 ON S1.0 FOR SLAB CONTROL JOINTS.

FP2. T/ SLAB EL =+0'-0"

FP3. T/ WALL & TC FTG. EL. = -1'-4" TYP. U.N.O.

FP3A. T/ STL. COL FTG. EL. = -2'-0" TYP. U.N.O.

FP3B. T/ PIER WALL FTG. EL. = -1'-4" TYP. U.N.O.

FP4. ALL FTGS ARE CENTERED BENEATH BRG WALLS AND COLS, TYP UNO.

FP5. SEE SHEET S1.0 FOR GENERAL NOTES AND SHEET S2.1 FOR CONCRETE COLUMNS SCHEDULE.

FP6. SIDEWALK SLAB = 4" CONCRETE SLAB ON COMPACTED FILL REINFORCED WITH 6x6 W1.4xW1.4 W.W.F., TYP.

FP7. NOT USED

FP8. a. ▦ DENOTES #6 IN 8" GROUT FILLED CELLS. FILL CELLS AT WALL ENDS, CORNERS, INTERSECTIONS, ABOVE AND BELOW OPENINGS AND AT 32" O.C. SPACING. REQUIRED FILLED CELLS WILL BE SHOWN ON PLAN. FOR DUMPSTER WALLS, SEE DETAIL 5/S4.0 AND PLAN.

8" MASONRY PARAPET WALLS:

b. ▦ DENOTES #6 IN GROUT FILLED CELLS AT ENDS, CORNERS AND INTERSECTIONS. SPACED NO GREATER THAN 32" O.C. TYP AT PARAPETS NOT TALLER THAN 3'-0". PARAPETS TALLER THAN 3'-0" USE #6 AT 16" O.C.

COLUMN / BASE PLATE SCHEDULE

COLUMN MARK	COLUMN SIZE	BASE PLATE A	BASE PLATE B	BASE PLATE T	ANCHOR BOLT E	ANCHOR BOLT D	CAP PLATE	REMARKS
C1	HSS 6 x 6 x 1/4"	12"	12"	3/4"	13"	3/4"		

NOTE:
ANCHOR BOLTS SHALL BE ASTM A36 (UNO) THREADED EACH END WITH NUT AT BOTTOM, TACK WELDED SECURE. PLATE WASHER AT BOTTOM NUT SHALL NOT BE REQUIRED. CONFORM TO CHART @ RIGHT FOR EMBEDMENT, UNLESS NOTED OTHERWISE IN SCHEDULE ABOVE.

BOLT TYPE, TYPE MATERIAL	MINIMUM EMBEDDED LENGTH	MINIMUM EMBEDDED EDGE DISTANCE
A307, A36	12d	5d > 4 in.
A325, A449	17d	7d > 4 in.

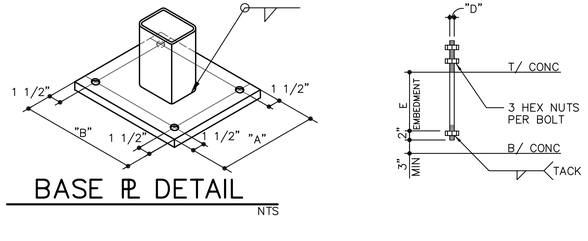

BASE PL DETAIL

NTS

FOUNDATION SCHEDULE

MARK	SIZE (L x W x D)	REINFORCING LONGITUDINAL	REINFORCING TRANSV.	REMARKS
F40	4'-0"x4'-0"x1'-0"	(4) #5 BOTT	(4) #5 BOTT	PAD FTG.
F60	6'-0"x6'-0"x1'-0"	(6) #5 BOTT	(6) #5 BOTT	PAD FTG.
F76	7'-6"x7'-6"x1'-6"	(8) #6 BOTT	(8) #6 BOTT	PAD FTG.
WF26	CONT. x2'-6"x1'-0"	(3) #5 CONT BOTT	#5/14 BOTTOM	WALL FTG
WF46	CONT. x4'-6"x1'-0"	(5) #6 CONT BOTT	#5/14 BOTTOM	WALL FTG

DESIGN INFORMATION:

NET ALLOWABLE SOIL BEARING PRESSURE = 2500 PSF

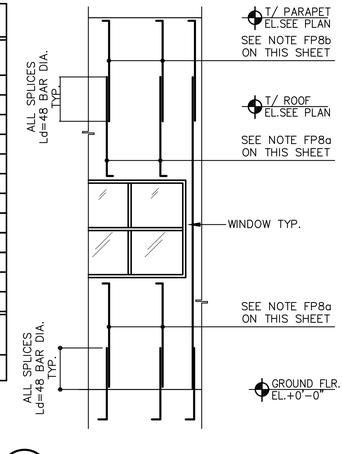

1 ELEV. FILLED CELLS

SCALE: N.T.S

THIS DOCUMENT CONTAINS COPYRIGHTED MATERIAL AND TRADE SECRET INFORMATION BELONGING EXCLUSIVELY TO WILLIAMSON DICAR ASSOCIATES, INC. ANY UNAUTHORIZED USE, DISCLOSURE, DUPLICATION, OR EXPLOITATION OF ANY OF THE INFORMATION CONTAINED HEREIN WILL RESULT IN LIABILITY UNDER APPLICABLE LAWS.

JOHNSON STRUCTURAL GROUP
E.B. #00008893
MARK JOHNSON, P.E. #51983, SECB
3500 N.W. Boca Raton Blvd. Suite #618
Boca Raton, FL. 33431
(P)(561) 982-8999 (F)(561) 982-8899
EMAIL: mark@johnsonstructural.com
WWW.JOHNSONSTRUCTURAL.COM
COPYRIGHT © 2016, JOHNSON STRUCTURAL GROUP, INC.

Architect: AA 0002541
Engineering: EB 0006884

MARK JOHNSON LICENSE NO. 51983 STATE OF FLORIDA PROFESSIONAL ENGINEER

WELLINGTON GREEN PARCEL "F"
PHASE II RETAIL "1" MODIFICATION
PETITION NO. 16-18 (2016-08 ASA 53)
2540 SOUTH STATE ROAD 7
WELLINGTON, FLORIDA 33444

Revisions of Drawings

No.	Date	Revisions
1	07.01.16	DESIGN REVISION

Issues of Drawings

No.	Date	Issues
1	06.15.16	100% CD – PERMIT SET

Phase:
Checked:
Drawn: 1/8"=1'-0"
Drawing Title: STRUCTURAL FOUNDATION PLAN

WDA Proj. No.: 1526-01
Owner Proj. No.:
Scale:
Sheet No.: S2.0
No. of Sheets.:

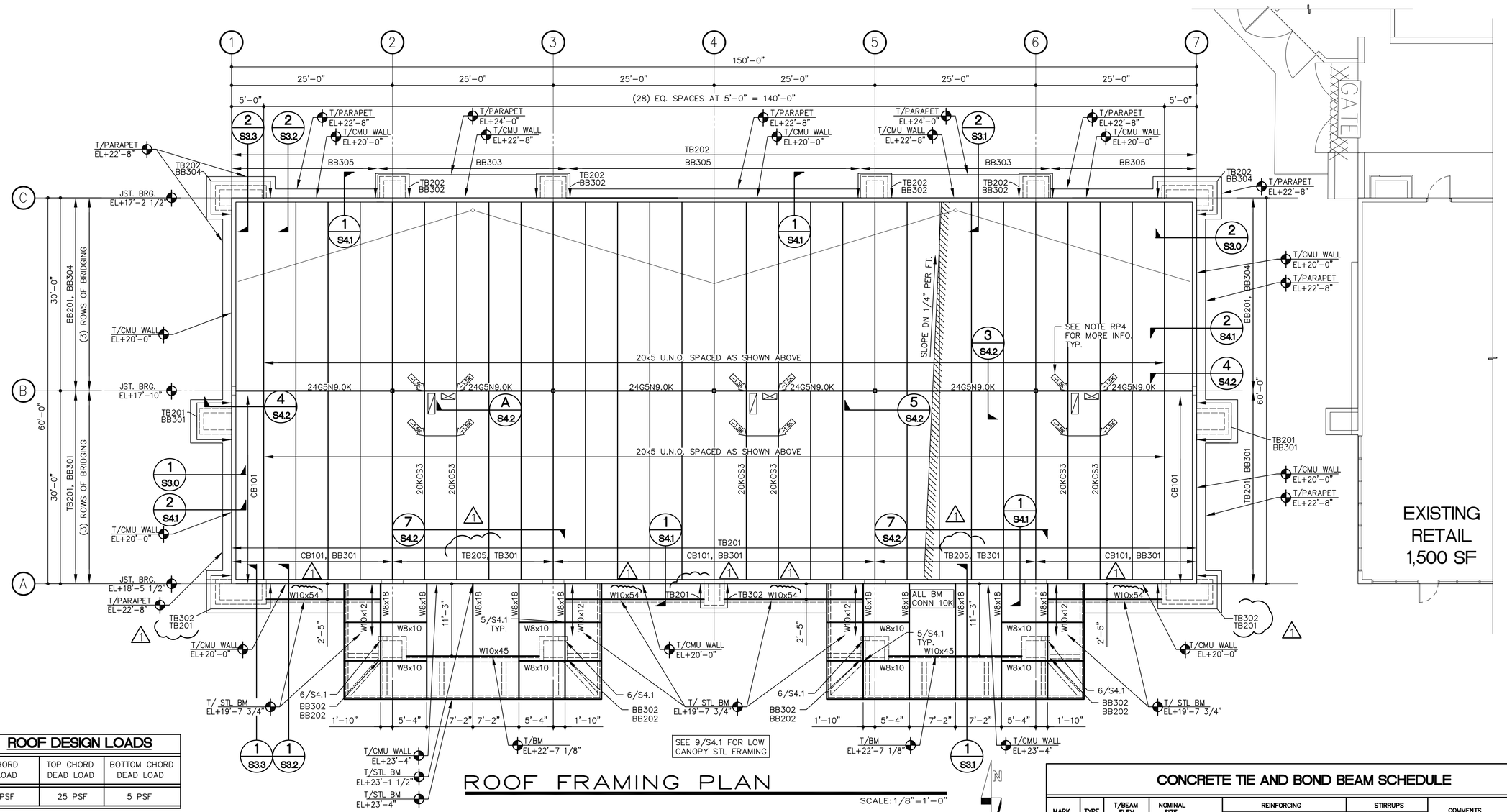

ROOF FRAMING PLAN

SCALE: 1/8"=1'-0"

ROOF DESIGN LOADS

TOP CHORD LIVE LOAD	TOP CHORD DEAD LOAD	BOTTOM CHORD DEAD LOAD
30 PSF	25 PSF	5 PSF

BUILDING ROOF PLAN NOTES:

RP1. BUILDING ROOF:
ROOF ASSEMBLY TO BE BUILT UP ROOF OVER 1.5" TYPE "B" 22Ga. GALVANIZED G90 METAL ROOF DECK CONT. OVER 3 OR MORE SPANS. ATTACHED DECK TO ALL SUPPORTS WITH 5/8"ø PUDDLE WELDS ON SDI 36/7 WELD PATTERN AND (6)#10 SIDELAP SCREWS BETWEEN SUPPORTS. ATTACH DECK AT PERIMETER WITH 5/8"ø PUDDLE WELDS AT 6" O.C.

RP2. TOP OF PARAPET EL. VARIES

RP3. SEE SHEET S1.0 FOR BRIDGING REQUIREMENTS FOR JOIST & JOIST GIRDERS.

RP4. PROVIDE SPECIAL JOISTS AND FRAMING (SEE DETAIL A/S4.1) AT ALL ROOF TOP A/C UNITS. REFER TO MECHANICAL HVAC PLAN FOR LOCATION AND WEIGHTS OF EACH UNIT.
DENOTES NET UPLIFT INFORMATION FOR JOIST MFR. USE AS PART OF THEIR DESIGN.

RP5. SEE PLAN FOR JOIST BEARING ELEVATIONS.

RP6. SEE SHEET S1.0 FOR UPLIFT BRIDGING DETAILS. SEE S1.0 FOR WIND UPLIFT LOADS.

RP7. TOP OF TIE COL. ELEV. = JOIST BRG. EL.

RP8. CONTINUE ALL BOND BEAMS AND CONCRETE BEAMS THROUGH A MASONRY JOINT.

RP9. U.N.O USE CAST CRETE 8F8 AT ALL REAR MAN DOORS.

RP10. REFER TO ARCH'L PLANS FOR MASONRY CONTROL JOINTS (MCJ) LOCATIONS.

RP11. SEE 9/S4.1 FOR LOW CANOPY FRAMING.

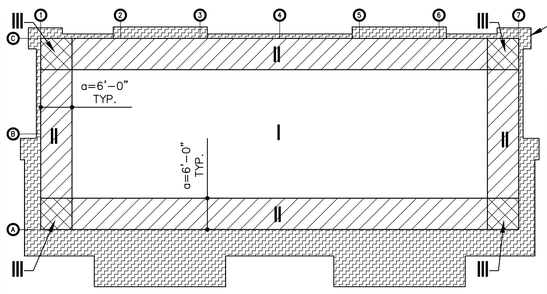

THIS HATCHING DENOTES OPEN STRUCTURE NET ROOF UPLIFT= 30.0 PSF (ROOFING UPLIFT=50.0 PSF)

BLDG. ROOF UPLIFT PLAN

ZONE	JOISTS & GIRDERS *	ROOFING
I	-23.8 PSF	-39.2 PSF
II	-30.1 PSF	-53.8 PSF
III	-30.1 PSF	-65.7 PSF

* NET UPLIFT (ALLOWABLE) BASED ON 100 SF – SEE ROOF DESIGN LOADS FOR ASCE 7-10 DESIGN PARAMETERS; a=6'-0"

CONCRETE TIE-COLUMN SCHEDULE

MARK	TYPE	SIZE (W X D)	VERTICALS	#3 TIES U.N.O.	REMARKS
TC1	1	8"x16"	(6) #6	@ 8" O.C.	T/COL ELEV. =JST. BRG ELEV.
TC2	2	8"x37"	(8) #6	@ 8" O.C.	T/COL ELEV. =JST. BRG ELEV.
TC3	1	8"x24"	(6) #6	@ 8" O.C.	T/COL ELEV. =T/WALL
TC4	1	8"x16"	(6) #5	@ 8" O.C.	T/COL ELEV. =BOTT STL BM
CC1	2	8"x40"	(8) #6	@ 8" O.C.	T/COL ELEV. =JST. BRG ELEV.
CC2	2	8"x38"	(8) #6	@ 8" O.C.	T/COL ELEV. =JST. BRG ELEV.

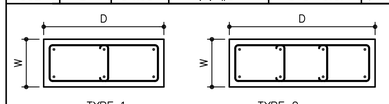

CONCRETE TIE AND BOND BEAM SCHEDULE

MARK	TYPE	T/BEAM ELEV.	NOMINAL SIZE (W" X D")	REINFORCING				STIRRUPS		COMMENTS
				BOTTOM	TOP	MIDDLE	OTHER	SIZE	SPACING	
CB101	6	+13'-0"	8x36	(2)#8	(2)#8	(2)#8		#3	AT 8" O.C.	CONCRETE BEAM
AB102										NOT USED
TB201	5	+19'-0"	8x20	(2)#6	(2)#6			#3	AT 12" O.C.	TIED BEAM
TB202	5	+18'-0"	8x24	(2)#6	(2)#6			#3	AT 12" O.C.	TIED BEAM
TB203										NOT USED
TB204										NOT USED
TB205	6	+15'-8"	8x38	(2)#8	(2)#8	(2)#8		#3	AT 8" O.C.	TIED BEAM
TB301	5	+23'-4"	8x24	(2)#6	(2)#6			#3	AT 12" O.C.	TIED BEAM
TB302	5	+20'-0"	8x24	(2)#6	(2)#6			#3	AT 12" O.C.	TIED BEAM
BB201	3	+18'-8"	8x24	(1)#7	(1)#7	(1)#7				BOND BEAM
BB202	2	+12'-0"	8x16	(1)#7	(1)#7					BOND BEAM
BB301	1	+20'-0"	8x12			(1)#7				BOND BEAM
BB302	3	+22'-8"	8x24	(1)#7	(1)#7	(1)#7				BOND BEAM
BB303	2	+22'-8"	8x16	(1)#7	(1)#7					BOND BEAM
BB304	2	+20'-0"	8x16	(1)#7	(1)#7					BOND BEAM
BB305	3	+20'-0"	8x24	(1)#7	(1)#7	(1)#7				BOND BEAM

TYPES

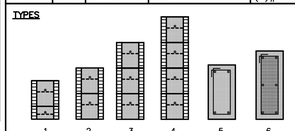

NOTE:
"BB" = BOND BEAM (COMPOSED OF KNOCK-OUT BLOCK)
"CB" = CONCRETE BEAM (FORMED & POURED)
"AB" = ARCHED BEAM (FORMED & POURED)
"TB" = TIE BEAM (FORMED & POURED ON CMU)

THIS DOCUMENT CONTAINS COPYRIGHTED MATERIAL AND TRADE SECRET INFORMATION BELONGING EXCLUSIVELY TO WILLIAMSON DAGAR ASSOCIATES, INC. ANY UNAUTHORIZED USE, DISCLOSURE, REPRODUCTION OR ADAPTATION OF ANY OF THE INFORMATION CONTAINED HEREIN ARE STRICTLY PROHIBITED AND WILL RESULT IN LEGAL ACTION UNDER APPLICABLE LAWS.

JOHNSON STRUCTURAL GROUP
E.B. #00008893
MARK JOHNSON, P.E. #51983, SECB
3500 N.W. Boca Raton Blvd. Suite #618
Boca Raton, FL. 33431
(P)(561) 982-8999 (F)(561) 982-8899
EMAIL: mark@johnsonstructural.com
WWW.JOHNSONSTRUCTURAL.COM
COPYRIGHT © 2016, JOHNSON STRUCTURAL GROUP, INC.

Architect: AA 0002541
Engineering: EB 0006884

MARK JOHNSON LICENSE NO. 51983 STATE OF FLORIDA PROFESSIONAL ENGINEER

WELLINGTON GREEN PARCEL "F"
PHASE II RETAIL "H" MODIFICATION
PETITION NO. 16-18 (2016-08 ASA 53)
2545 SOUTH STATE ROAD 7
WELLINGTON, FLORIDA 33444

Revisions of Drawings

No.	Date	Revisions
1	07.01.16	DESIGN REVISION

Issues of Drawings

No.	Date	Issues
1	06.15.16	100% CD – PERMIT SET

Phase:
Checked:
Drawn: 1/8"=1'-0"
Drawing Title: STRUCTURAL ROOF FRAMING PLAN

WDA Proj. No.: 1526-01
Owner Proj. No.:
Scale:

Sheet No.: S2.1
No. of Sheets:

METAL STUD (50KSI) AND PLYWOOD CONNECTIONS:

1. 5/8" THK FRT PLYWOOD SHEATING. PROVIDE #8-1 5/8" S-12 ROCK ON SCREWS AT 8" O.C. ALONG STUD SPAN FOR PLYWOOD TO MTL STUD FLANGE CONN.
2. 6", 16ga. CEE MTL STUDS AT 16" O.C.
3. 3 5/8", 16ga. CEE MTL STUDS AT 16" O.C.
4. 2 1/2", 16ga. CEE MTL STUDS AT 16" O.C.
5. 16ga. CLIP ANGLE W/(3)#12 TEKS FROM CLIP TO MTL STUD WEB AND (3) 1/4"ø x1-3/4" TAPCONS FROM CLIP TO CMU WALL. MAKE CLIP ANGLE FULL WIDTH/HEIGHT OF MTL STUDS. TAPCON EDGE DISTANCE 1 1/2" MIN.
6. (3)#12 TEKS FOR MTL STUD TO STUD CONN.
7. (5)#12 TEKS FORM STUD FLANGE TO STUD FLANGE AT ENDS AND EQUAL SPACING.
8. CONT. 18ga. MTL ANGLE. USE (2)#12 TEKS FROM ANGLE TO STUD CONN.
9. PROVIDE MATCHING TRACK W/ (1) #12 TEK PER FLANGE.
10. 16ga. CLIP ANGLE W/(2)#12 TEKS FROM CLIP TO MTL STUD FLANGE AND (2) 1/4"ø x1-3/4" TAPCONS FROM CLIP TO TOP OF CMU WALL. MAKE CLIP ANGLE FULL WIDTH/HEIGHT OF MTL STUDS. TAPCON EDGE DISTANCE 1 1/2" MIN.
11. 16ga. CLIP ANGLE W/(4)#12 TEKS FROM CLIP TO MTL STUD WEB CONN. AND (3) 0.205"ø POWDER FASTENERS FROM CLIP TO STEEL BEAM CONN. MAKE CLIP ANGLE FULL WIDTH/HEIGHT OF MTL STUDS.
12. 16ga. CLIP ANGLE W/(2)#12 TEKS FROM CLIP TO MTL STUD WEB CONN. AND (2) 0.205"ø POWDER FASTENERS FROM CLIP TO STEEL BEAM CONN. MAKE CLIP ANGLE FULL WIDTH/HEIGHT OF MTL STUDS.
13. PROVIDE BRIDGING AT 5'-0" O.C. MAX.
14. L5x5x5/16 LLV, CONTINOUS. TO PERPENDICULAR BMS: 1/4" FILLET WELD FULL LENGTH, BOTH SIDES OF ANGLE.

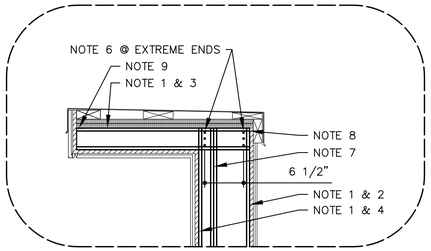

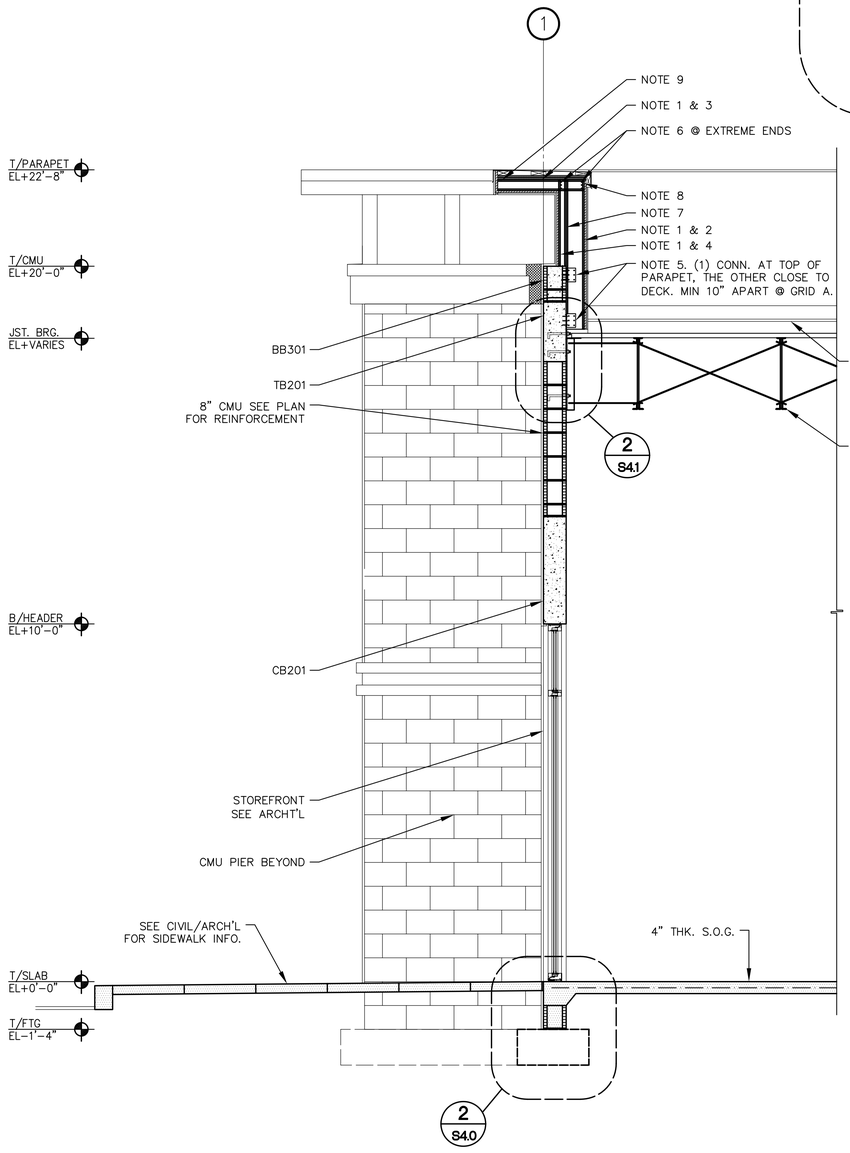

1 SIDE WALL SECTION
SCALE: 1/2"=1'-0"

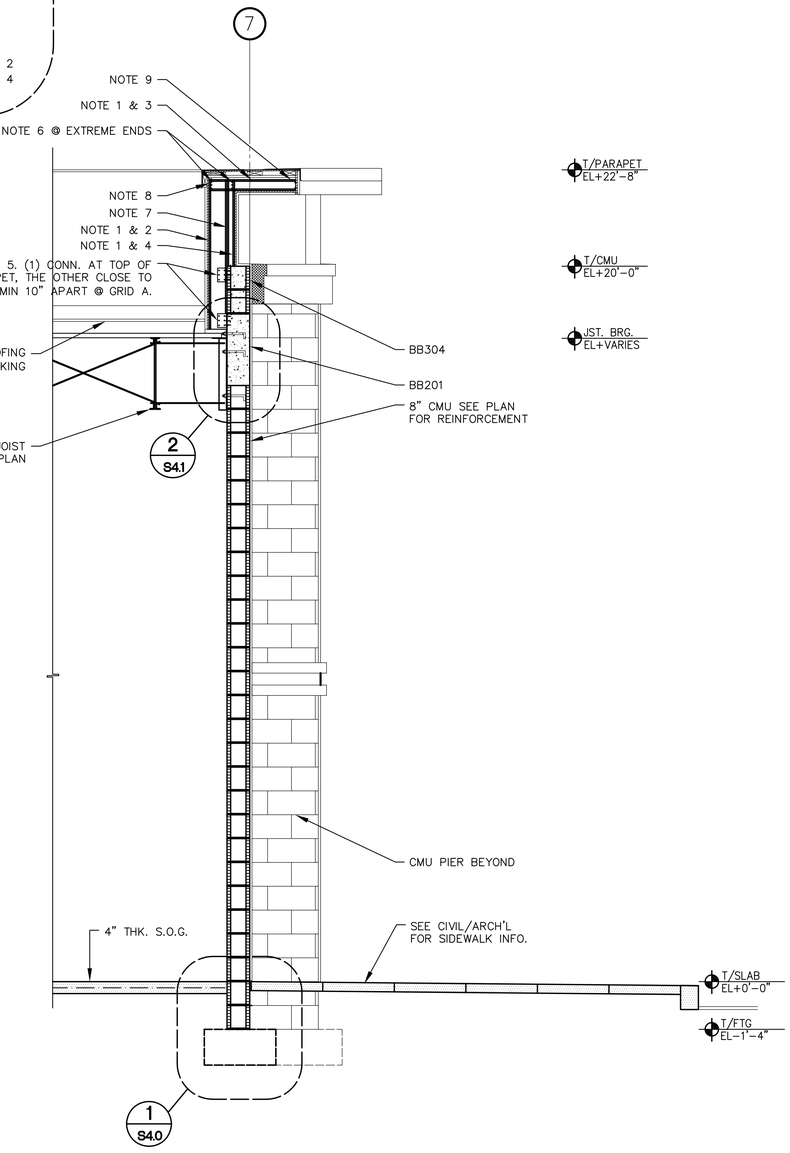

2 SIDE WALL SECTION
SCALE: 1/2"=1'-0"

THIS DOCUMENT CONTAINS COPYRIGHTED MATERIAL AND TRADE SECRET INFORMATION BELONGING EXCLUSIVELY TO WILLIAMSON DACAR ASSOCIATES, INC. ANY UNAUTHORIZED USE, DISCLOSURE, DISSEMINATION, OR APPLICATION OF ANY OF THE INFORMATION CONTAINED HEREIN MAY RESULT IN LIABILITY UNDER APPLICABLE LAWS.

JOHNSON STRUCTURAL GROUP
E.B. #00008893
MARK JOHNSON, P.E. #51983, SECB
3500 N.W. Boca Raton Blvd. Suite #618
Boca Raton, FL. 33431
(P)(561) 982-8999 (F)(561) 982-8899
EMAIL: mark@johnsonstructural.com
WWW.JOHNSONSTRUCTURAL.COM
COPYRIGHT © 2016, JOHNSON STRUCTURAL GROUP, INC.

Architect: AA 0002541
Engineering: EB 0006884

MARK JOHNSON LICENSE NO. 51983 STATE OF FLORIDA PROFESSIONAL ENGINEER

WELLINGTON GREEN PARCEL "F"
PHASE II RETAIL "H" MODIFICATION
PETITION NO. 16-18 (2016-08 ASA 53)
2545 SOUTH STATE ROAD 7
WELLINGTON, FLORIDA 33444

Revisions of Drawings

No.	Date	Revisions

Issues of Drawings

No.	Date	Issues
1	06.15.16	100% CD – PERMIT SET

Phase:
Checked:
Drawn: 1/2"=1'-0"
Drawing Title
STRUCTURAL WALL SECTIONS

WDA Proj. No.: 1526-01
Owner Proj. No.:
Scale:
Sheet No.
S3.0
No. of Sheets.:

METAL STUD (50KSI) AND PLYWOOD CONNECTIONS:

1. 5/8" THK FRT PLYWOOD SHEATING. PROVIDE #8-1 5/8" S-12 ROCK ON SCREWS AT 8" O.C. ALONG STUD SPAN FOR PLYWOOD TO MTL STUD FLANGE CONN.
2. 6", 16ga. CEE MTL STUDS AT 16" O.C.
3. 3 5/8", 16ga. CEE MTL STUDS AT 16" O.C.
4. 2 1/2", 16ga. CEE MTL STUDS AT 16" O.C.
5. 16ga. CLIP ANGLE W/(3)#12 TEKS FROM CLIP TO MTL STUD WEB AND (3) 1/4"ø x1-3/4" TAPCONS FROM CLIP TO CMU WALL. MAKE CLIP ANGLE FULL WIDTH/HEIGHT OF MTL STUDS. TAPCON EDGE DISTANCE 1 1/2" MIN.
6. (3)#12 TEKS FOR MTL STUD TO STUD CONN.
7. (5)#12 TEKS FORM STUD FLANGE TO STUD FLANGE AT ENDS AND EQUAL SPACING.
8. CONT. 18ga. MTL ANGLE. USE (2)#12 TEKS FROM ANGLE TO STUD CONN.
9. PROVIDE MATCHING TRACK W/ (1) #12 TEK PER FLANGE.
10. 16ga. CLIP ANGLE W/(2)#12 TEKS FROM CLIP TO MTL STUD FLANGE AND (2) 1/4"ø x1-3/4" TAPCONS FROM CLIP TO TOP OF CMU WALL. MAKE CLIP ANGLE FULL WIDTH/HEIGHT OF MTL STUDS. TAPCON EDGE DISTANCE 1 1/2" MIN.
11. 16ga. CLIP ANGLE W/(4)#12 TEKS FROM CLIP TO MTL STUD WEB CONN. AND (3) 0.205"ø POWDER FASTENERS FROM CLIP TO STEEL BEAM CONN. MAKE CLIP ANGLE FULL WIDTH/HEIGHT OF MTL STUDS.
12. 16ga. CLIP ANGLE W/(2)#12 TEKS FROM CLIP TO MTL STUD WEB CONN. AND (2) 0.205"ø POWDER FASTENERS FROM CLIP TO STEEL BEAM CONN. MAKE CLIP ANGLE FULL WIDTH/HEIGHT OF MTL STUDS.
13. PROVIDE BRIDGING AT 5'-0" O.C. MAX.
14. L5x5x¼ LLV, CONTINOUS. TO PERPENDICULAR BMS: ¼" FILLET WELD FULL LENGTH, BOTH SIDES OF ANGLE.

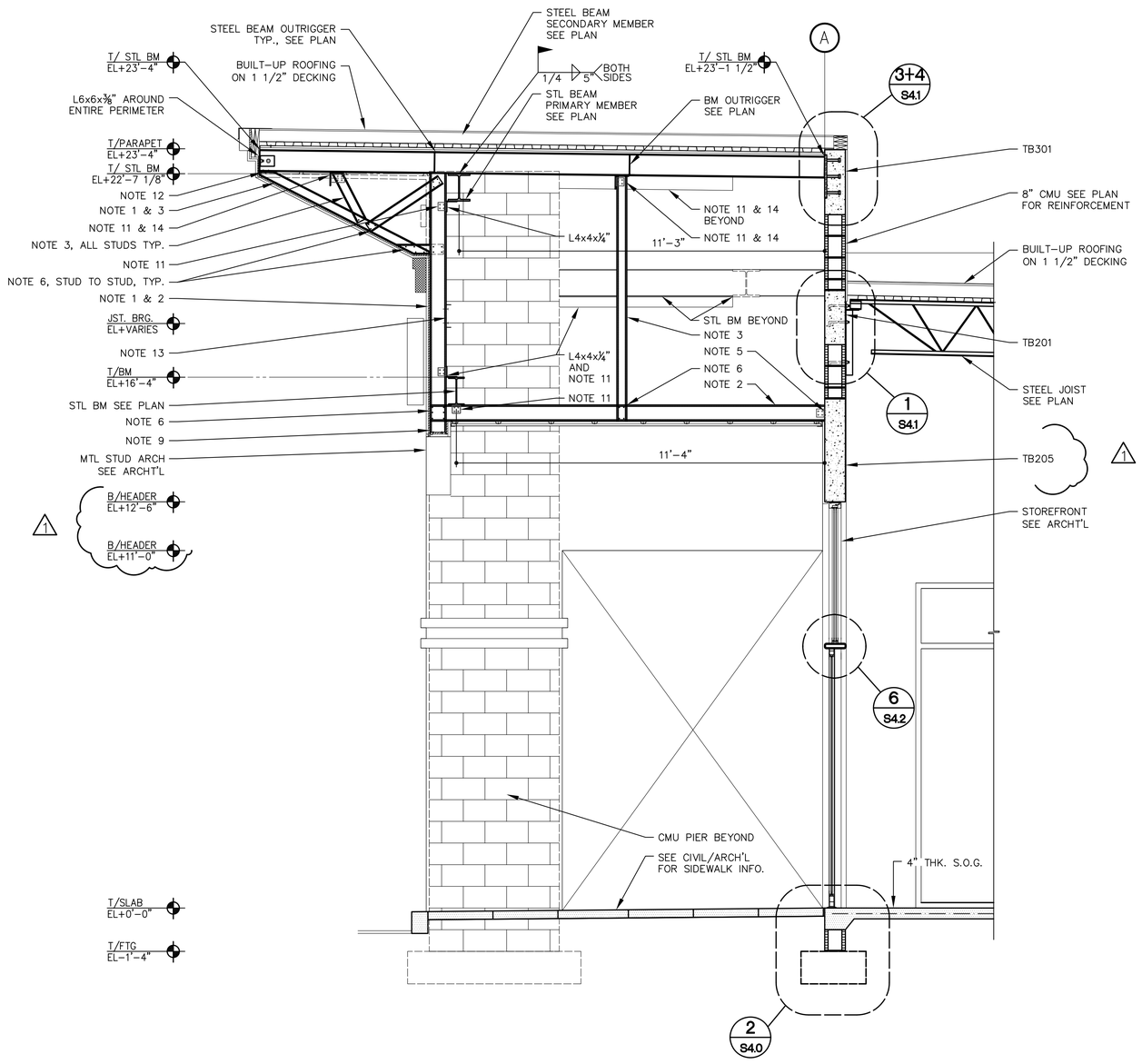

1 FRONT CANOPY WALL SECTION
SCALE: 1/2"=1'-0"

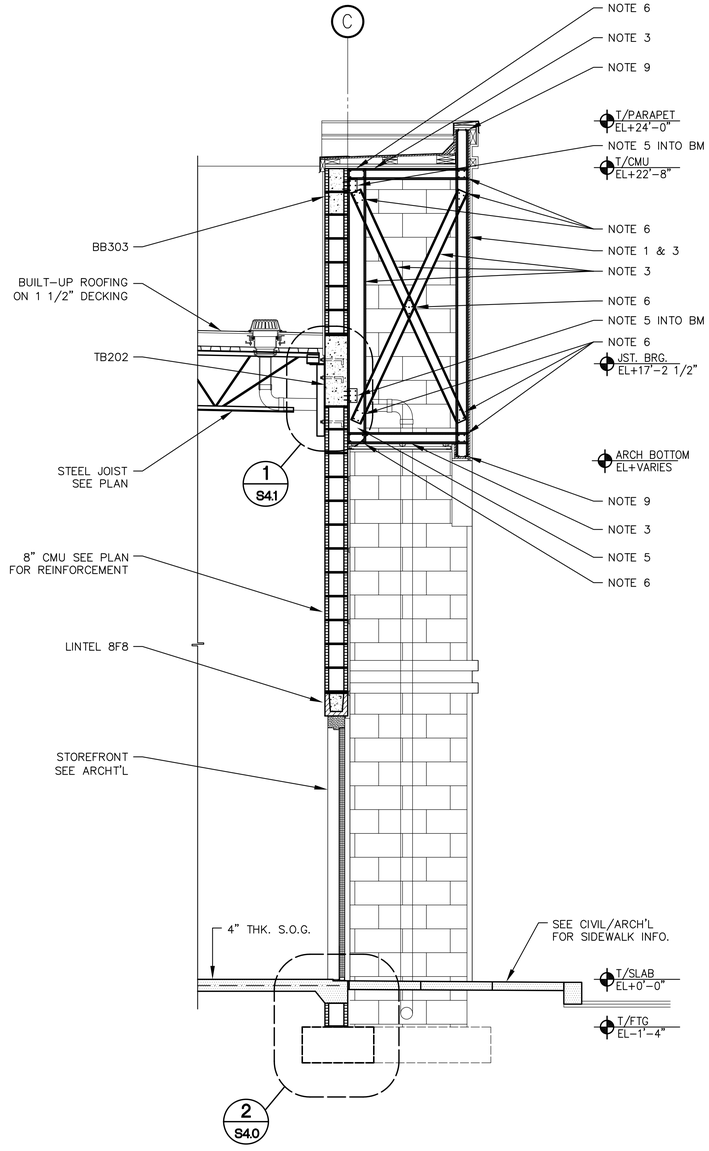

2 BACK WALL SECTION
SCALE: 1/2"=1'-0"

THIS DOCUMENT CONTAINS COPYRIGHTED MATERIAL AND TRADE SECRET INFORMATION BELONGING EXCLUSIVELY TO WILLIAMSON DUGAN ASSOCIATES, INC. ANY UNAUTHORIZED USE, DISCLOSURE, REPRODUCTION OR APPLICATION OF ANY OF THE INFORMATION CONTAINED HEREIN MAY RESULT IN LIABILITY UNDER APPLICABLE LAWS.

JOHNSON STRUCTURAL GROUP
E.B. #00008893
MARK JOHNSON, P.E. #51983, SECB
3500 N.W. Boca Raton Blvd. Suite #618
Boca Raton, FL. 33431
(P)(561) 982-8999 (F)(561) 982-8899
EMAIL: mark@johnsonstructural.com
WWW.JOHNSONSTRUCTURAL.COM
COPYRIGHT © 2016, JOHNSON STRUCTURAL GROUP, INC.

Architect: AA 0002541
Engineering: EB 0006884

MARK JOHNSON LICENSE NO. 51983 STATE OF FLORIDA PROFESSIONAL ENGINEER

WELLINGTON GREEN PARCEL "F"
PHASE II RETAIL "H" MODIFICATION
PETITION NO. 16-18 (2016-08 ASA 53)
2545 SOUTH STATE ROAD 7
WELLINGTON, FLORIDA 33444

Revisions of Drawings

No.	Date	Revisions
1	07.01.16	DESIGN REVISION

Issues of Drawings

No.	Date	Issues
1	06.15.16	100% CD – PERMIT SET

Phase:
Checked:
Drawn: 1/2"=1'-0"
Drawing Title: STRUCTURAL WALL SECTIONS

WDA Proj. No.: 1526-01
Owner Proj. No.:
Scale:
Sheet No.: S3.1
No. of Sheets.:

METAL STUD (50KSI) AND PLYWOOD CONNECTIONS:

1. 5/8" THK FRT PLYWOOD SHEATING. PROVIDE #8-1 5/8" S-12 ROCK ON SCREWS AT 8" O.C. ALONG STUD SPAN FOR PLYWOOD TO MTL STUD FLANGE CONN.
2. 6", 16ga. CEE MTL STUDS AT 16" O.C.
3. 3 5/8", 16ga. CEE MTL STUDS AT 16" O.C.
4. 2 1/2", 16ga. CEE MTL STUDS AT 16" O.C.
5. 16ga. CLIP ANGLE W/(3)#12 TEKS FROM CLIP TO MTL STUD WEB AND (3) 1/4"ø x1-3/4" TAPCONS FROM CLIP TO CMU WALL. MAKE CLIP ANGLE FULL WIDTH/HEIGHT OF MTL STUDS. TAPCON EDGE DISTANCE 1 1/2" MIN.
6. (3)#12 TEKS FOR MTL STUD TO STUD CONN.
7. (5)#12 TEKS FORM STUD FLANGE TO STUD FLANGE AT ENDS AND EQUAL SPACING.
8. CONT. 18ga. MTL ANGLE. USE (2)#12 TEKS FROM ANGLE TO STUD CONN.
9. PROVIDE MATCHING TRACK W/ (1) #12 TEK PER FLANGE.
10. 16ga. CLIP ANGLE W/(2)#12 TEKS FROM CLIP TO MTL STUD FLANGE AND (2) 1/4"ø x1-3/4" TAPCONS FROM CLIP TO CMU WALL. MAKE CLIP ANGLE FULL WIDTH/HEIGHT OF MTL STUDS. TAPCON EDGE DISTANCE 1 1/2" MIN.
11. 16ga. CLIP ANGLE W/(4)#12 TEKS FROM CLIP TO MTL STUD WEB CONN. AND (3) 0.205"ø POWDER FASTENERS FROM CLIP TO STEEL BEAM CONN. MAKE CLIP ANGLE FULL WIDTH/HEIGHT OF MTL STUDS.
12. 16ga. CLIP ANGLE W/(2)#12 TEKS FROM CLIP TO MTL STUD WEB CONN. AND (2) 0.205"ø POWDER FASTENERS FROM CLIP TO STEEL BEAM CONN. MAKE CLIP ANGLE FULL WIDTH/HEIGHT OF MTL STUDS.
13. PROVIDE BRIDGING AT 5'-0" O.C. MAX.
14. L5x5x¼ LLV, CONTINOUS. TO PERPENDICULAR BMS: ¼" FILLET WELD FULL LENGTH, BOTH SIDES OF ANGLE.

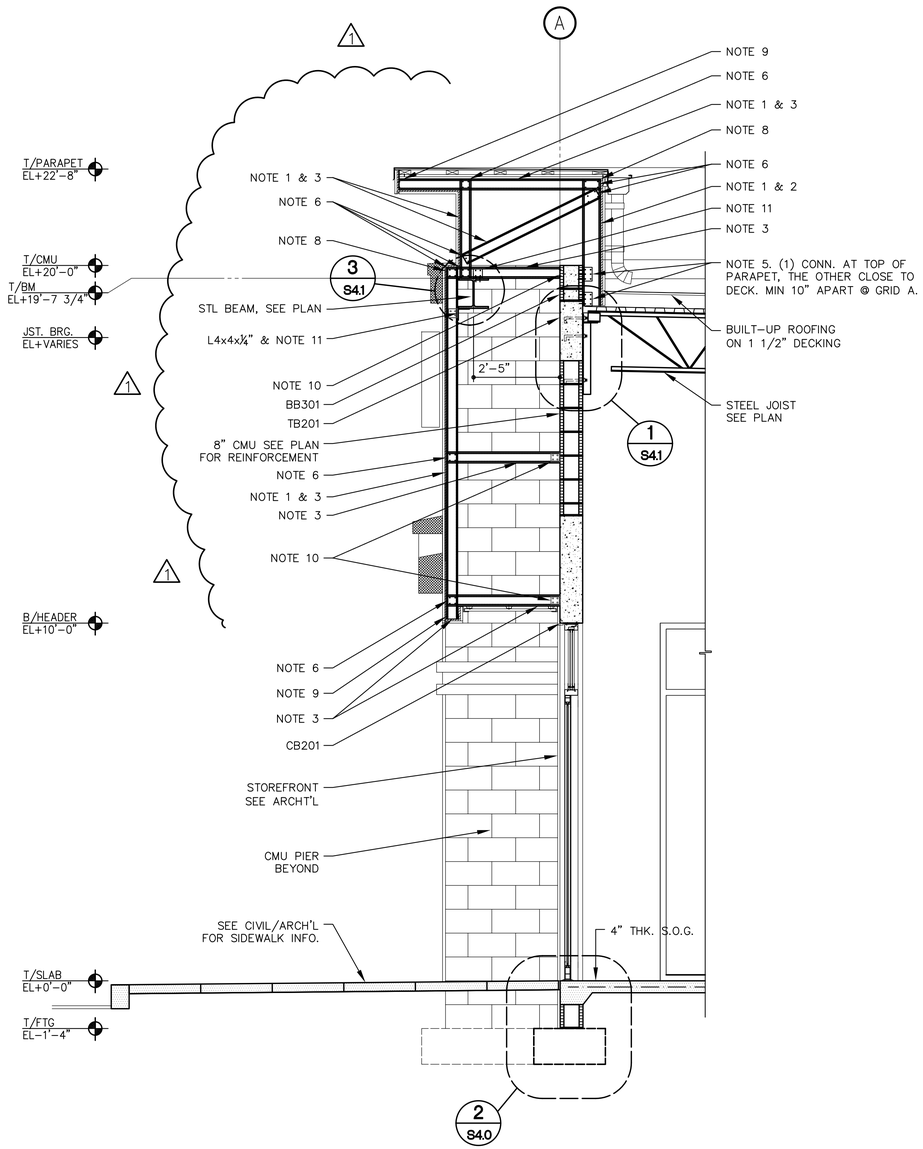

1 FRONT CANOPY WALL SECTION
SCALE: 1/2"=1'-0"

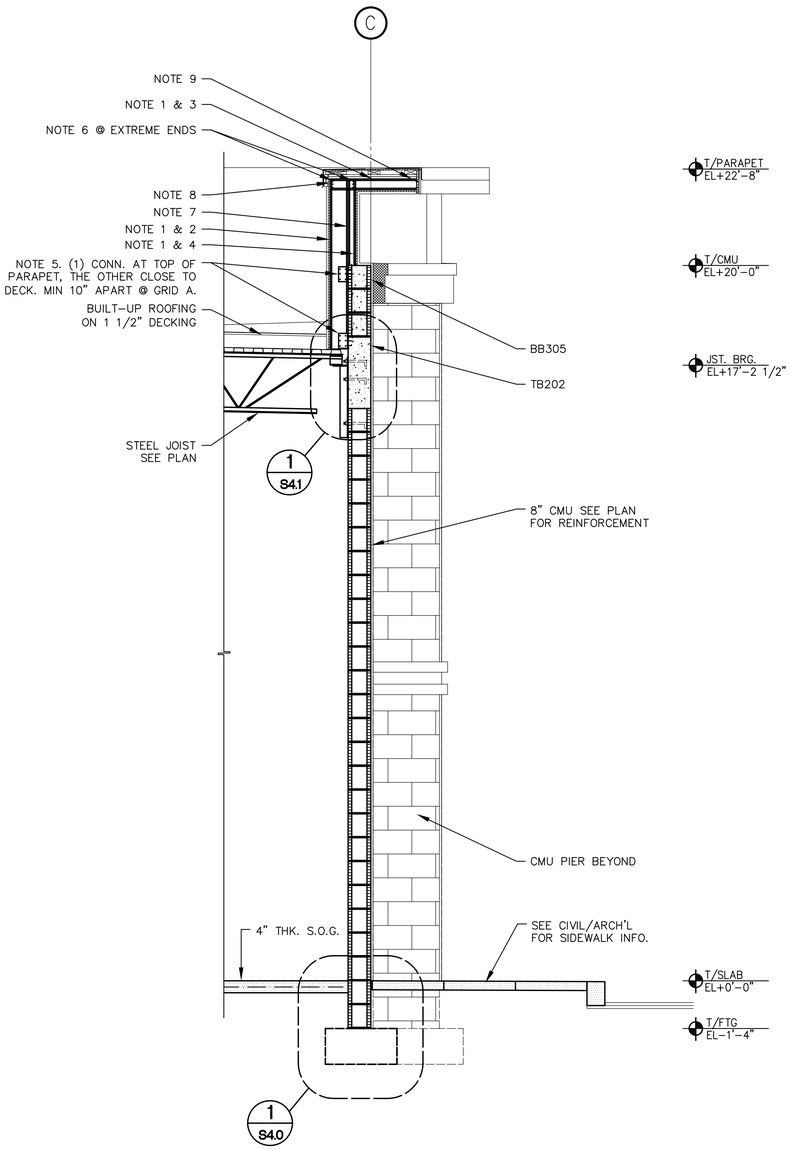

2 BACK WALL SECTION
SCALE: 1/2"=1'-0"

THIS DOCUMENT CONTAINS COPYRIGHTED MATERIAL AND TRADE SECRET INFORMATION BELONGING EXCLUSIVELY TO WILLIAMSON DAGAR ASSOCIATES, INC. AND UNAUTHORIZED USE, DISCLOSURE, COPYING OR EXECUTION OF ANY OF THE INFORMATION CONTAINED HEREIN MAY RESULT IN LIABILITY UNDER APPLICABLE LAWS.

JOHNSON STRUCTURAL GROUP
E.B. #00008893
MARK JOHNSON, P.E. #51983, SECB
3500 N.W. Boca Raton Blvd. Suite #618
Boca Raton, FL. 33431
(P)(561) 982-8999 (F)(561) 982-8899
EMAIL: mark.j@johnsonstructural.com
WWW.JOHNSONSTRUCTURAL.COM
COPYRIGHT © 2016, JOHNSON STRUCTURAL GROUP, INC.

Architect: AA 0002541
Engineering: EB 0006884

MARK JOHNSON LICENSE NO. 51983 STATE OF FLORIDA PROFESSIONAL ENGINEER

WELLINGTON GREEN PARCEL "F"
PHASE II RETAIL "H" MODIFICATION
PETITION NO. 16-18 (2016-08 ASA 53)
2545 SOUTH STATE ROAD 7
WELLINGTON, FLORIDA 33444

Revisions of Drawings

No.	Date	Revisions
1	07.01.16	DESIGN REVISION

Issues of Drawings

No.	Date	Issues
1	06.15.16	100% CD – PERMIT SET

Phase:
Checked:
Drawn: 1/2"=1'-0"
Drawing Title: STRUCTURAL WALL SECTIONS
WDA Proj. No.: 1526-01
Owner Proj. No.:
Scale:
Sheet No.: S3.2
No. of Sheets.:

METAL STUD (50KSI) AND PLYWOOD CONNECTIONS:

1. 5/8" THK FRT PLYWOOD SHEATING. PROVIDE #8-1 5/8" S-12 ROCK ON SCREWS AT 8" O.C. ALONG STUD SPAN FOR PLYWOOD TO MTL STUD FLANGE CONN.
2. 6", 16ga. CEE MTL STUDS AT 16" O.C.
3. 3 5/8", 16ga. CEE MTL STUDS AT 16" O.C.
4. 2 1/2", 16ga. CEE MTL STUDS AT 16" O.C.
5. 16ga. CLIP ANGLE W/(3)#12 TEKS FROM CLIP TO MTL STUD WEB AND (3) 1/4"ø x1-3/4" TAPCONS FROM CLIP TO CMU WALL. MAKE CLIP ANGLE FULL WIDTH/HEIGHT OF MTL STUDS. TAPCON EDGE DISTANCE 1 1/2" MIN.
6. (3)#12 TEKS FOR MTL STUD TO STUD CONN.
7. (5)#12 TEKS FORM STUD FLANGE TO STUD FLANGE AT ENDS AND EQUAL SPACING.
8. CONT. 18ga. MTL ANGLE. USE (2)#12 TEKS FROM ANGLE TO STUD CONN.
9. PROVIDE MATCHING TRACK W/ (1) #12 TEK PER FLANGE.
10. 16ga. CLIP ANGLE W/(2)#12 TEKS FROM CLIP TO MTL STUD FLANGE AND (2) 1/4"ø x1-3/4" TAPCONS FROM CLIP TO TOP OF CMU WALL. MAKE CLIP ANGLE FULL WIDTH/HEIGHT OF MTL STUDS. TAPCON EDGE DISTANCE 1 1/2" MIN.
11. 16ga. CLIP ANGLE W/(4)#12 TEKS FROM CLIP TO MTL STUD WEB CONN. AND (3) 0.205"ø POWDER FASTENERS FROM CLIP TO STEEL BEAM CONN. MAKE CLIP ANGLE FULL WIDTH/HEIGHT OF MTL STUDS.
12. 16ga. CLIP ANGLE W/(2)#12 TEKS FROM CLIP TO MTL STUD WEB CONN. AND (2) 0.205"ø POWDER FASTENERS FROM CLIP TO STEEL BEAM CONN. MAKE CLIP ANGLE FULL WIDTH/HEIGHT OF MTL STUDS.
13. PROVIDE BRIDGING AT 5'-0" O.C. MAX.
14. L5x5x1/4 LLV, CONTINOUS. TO PERPENDICULAR BMS: 1/4" FILLET WELD FULL LENGTH, BOTH SIDES OF ANGLE.

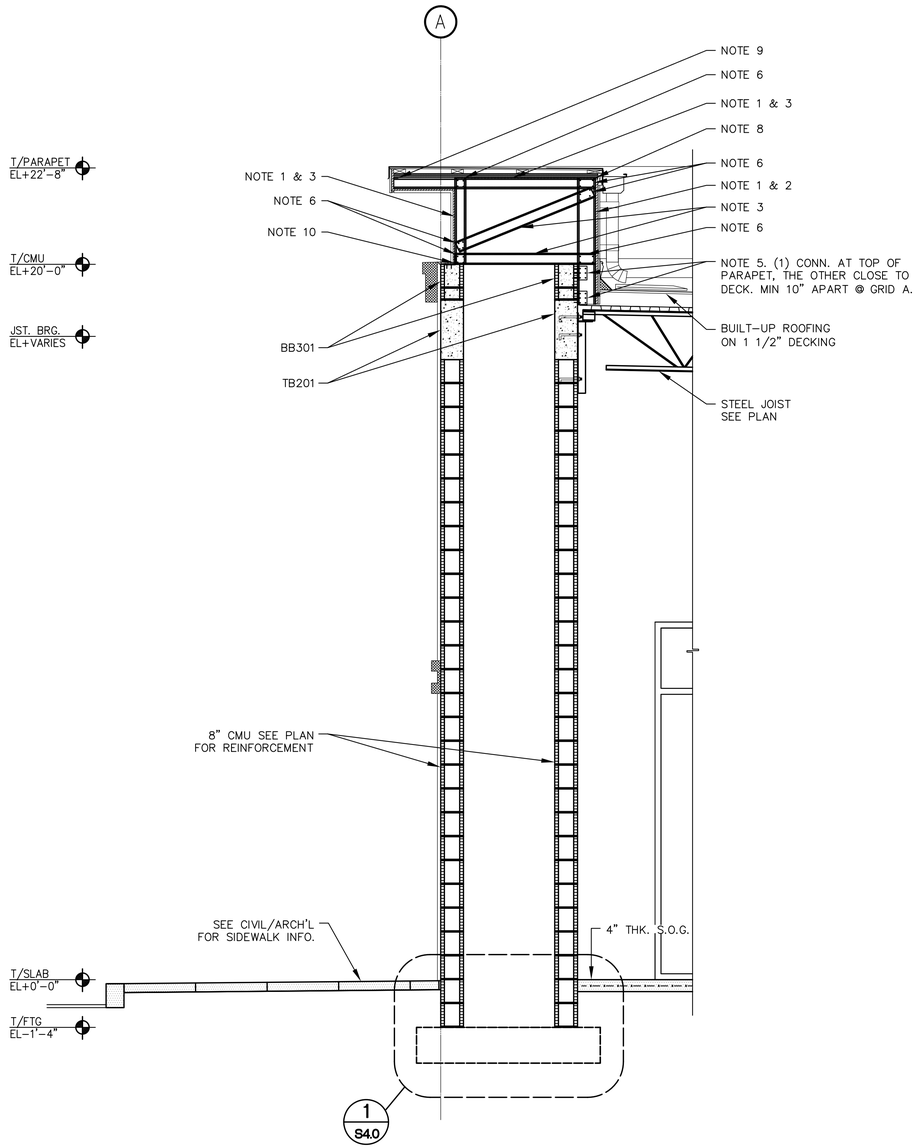

1 FRONT CANOPY WALL SECTION
SCALE: 1/2"=1'-0"

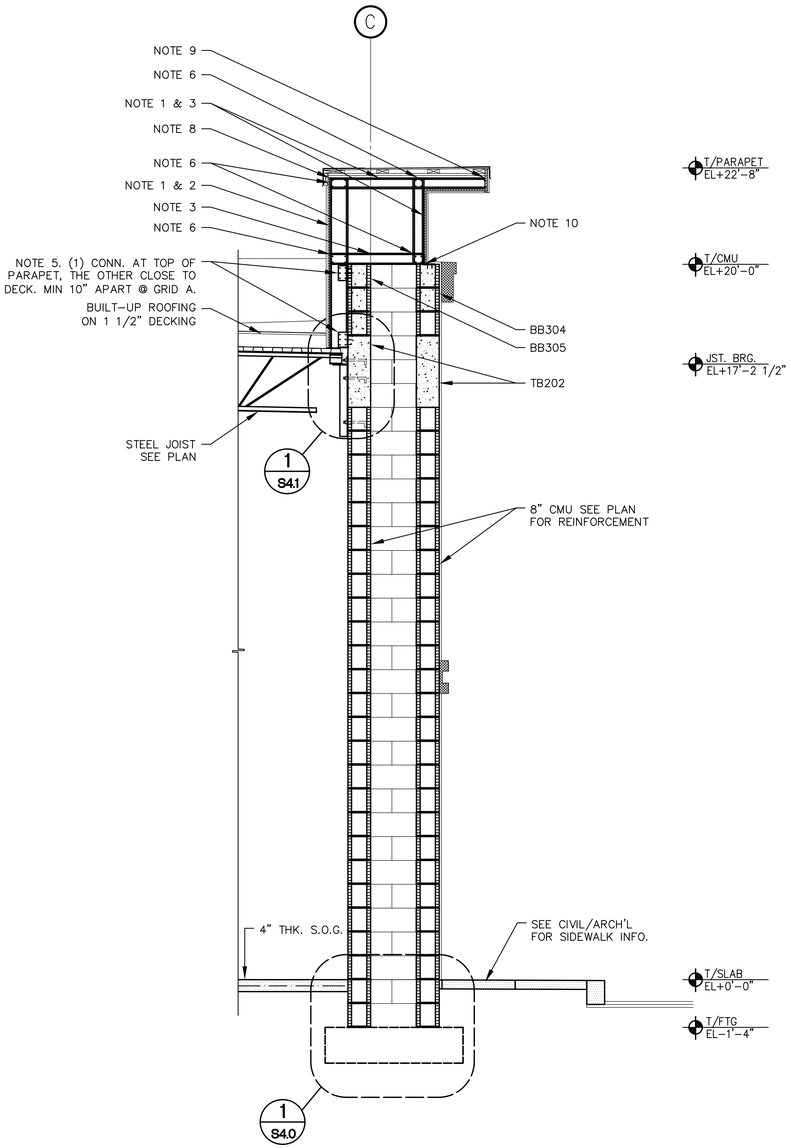

2 BACK CORNER WALL SECTION
SCALE: 1/2"=1'-0"

THIS DOCUMENT CONTAINS COPYRIGHTED MATERIAL AND TRADE SECRET INFORMATION BELONGING EXCLUSIVELY TO WELLINGTON EQUITY ASSOCIATES, INC. ANY UNAUTHORIZED USE, DISCLOSURE, DUPLICATION OR DISTRIBUTION OF ANY OF THE INFORMATION CONTAINED HEREIN MAY RESULT IN LIABILITY UNDER APPLICABLE LAWS.

JOHNSON STRUCTURAL GROUP
E.B. #00008893
MARK JOHNSON, P.E. #51983, SECB
3500 N.W. Boca Raton Blvd. Suite #618
Boca Raton, FL. 33431
(P)(561) 982-8999 (F)(561) 982-8899
EMAIL: mark@johnsonstructural.com
WWW.JOHNSONSTRUCTURAL.COM
COPYRIGHT © 2016, JOHNSON STRUCTURAL GROUP, INC.

Architect: AA 0002541
Engineering: EB 0006884

MARK JOHNSON LICENSE NO. 51983 STATE OF FLORIDA PROFESSIONAL ENGINEER

WELLINGTON GREEN PARCEL "F"
PHASE II RETAIL "H" MODIFICATION
PETITION NO. 16-18 (2016-08 ASA 53)
2546 SOUTH STATE ROAD 7
WELLINGTON, FLORIDA 33444

Revisions of Drawings

No.	Date	Revisions

Issues of Drawings

No.	Date	Issues
1	06.15.16	100% CD – PERMIT SET

Phase:
Checked:
Drawn: 1/2"=1'-0"
Drawing Title: STRUCTURAL WALL SECTIONS

WDA Proj. No.: 1526-01
Owner Proj. No.:
Scale:
Sheet No.: S3.3
No. of Sheets.:

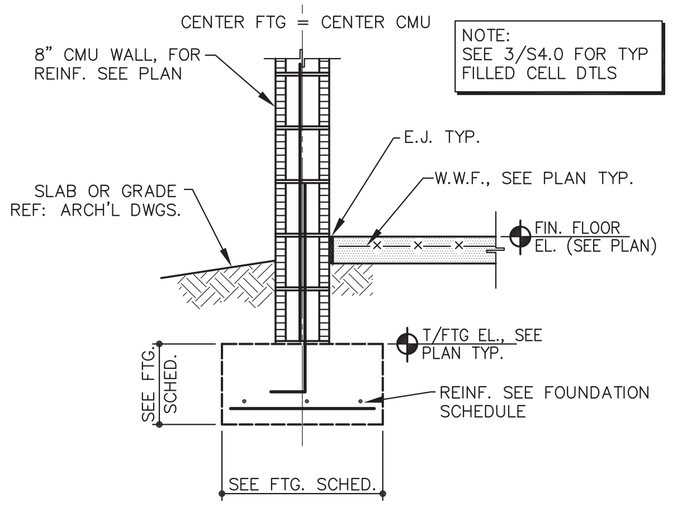

1 SECTION @ WALL

SCALE: 3/4"=1'-0" TYP. U.N.O.

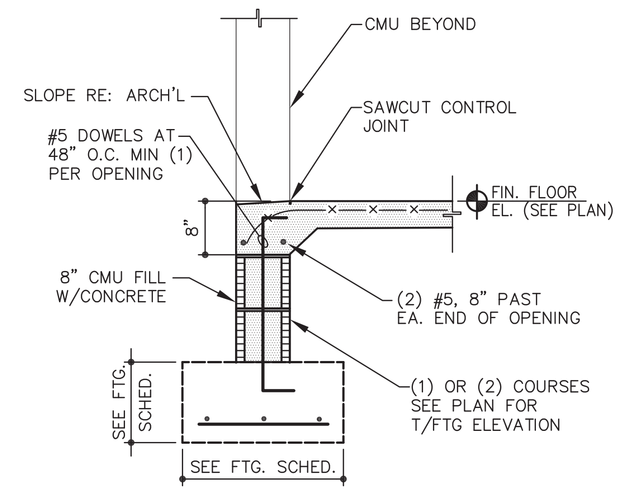

2 SECTION @ DOOR OPENING

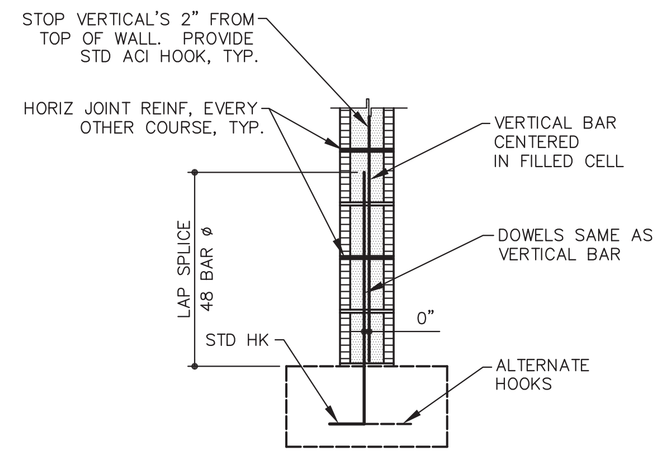

3 TYP. CMU FILLED CELL

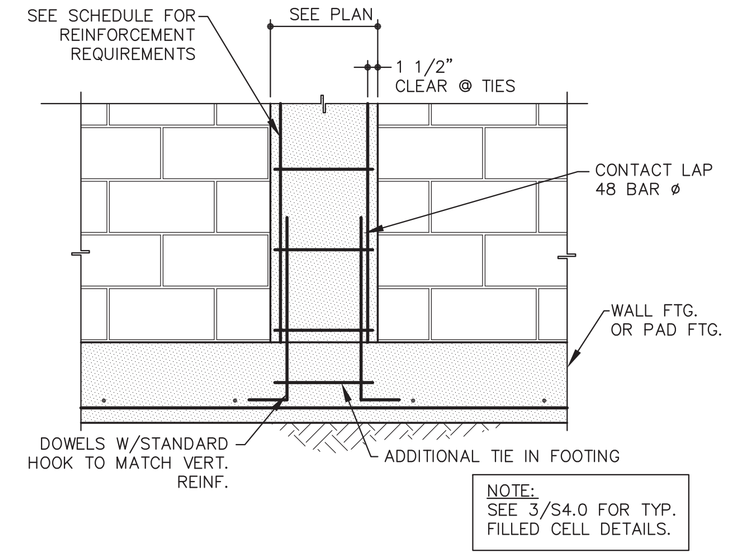

4 DETAIL @ TYP. TIE COLUMN

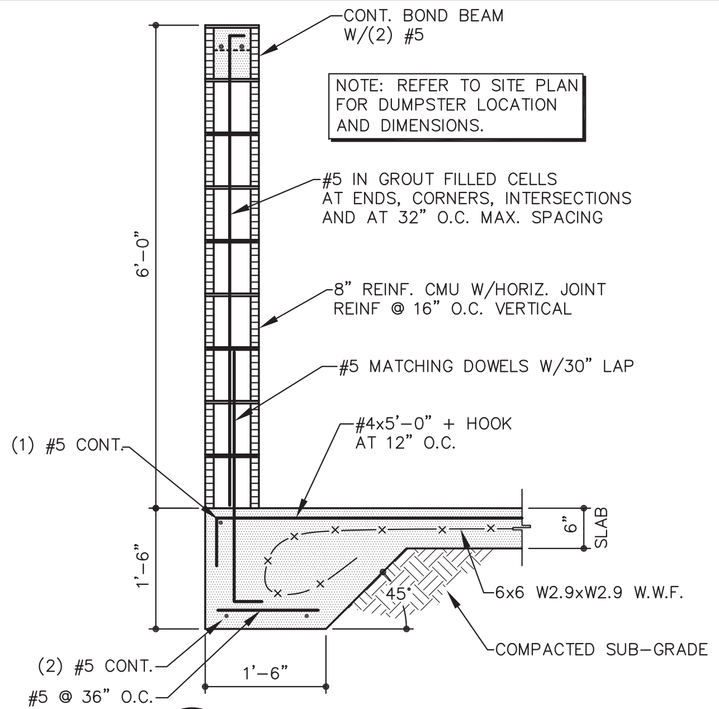

5 SECTION @ DUMPSTER

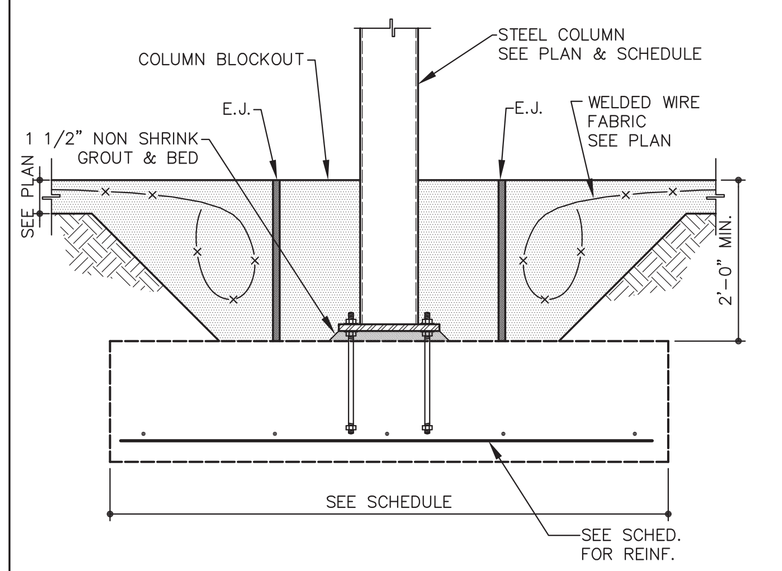

6 SECT @ TYP. INTERIOR COLUMN

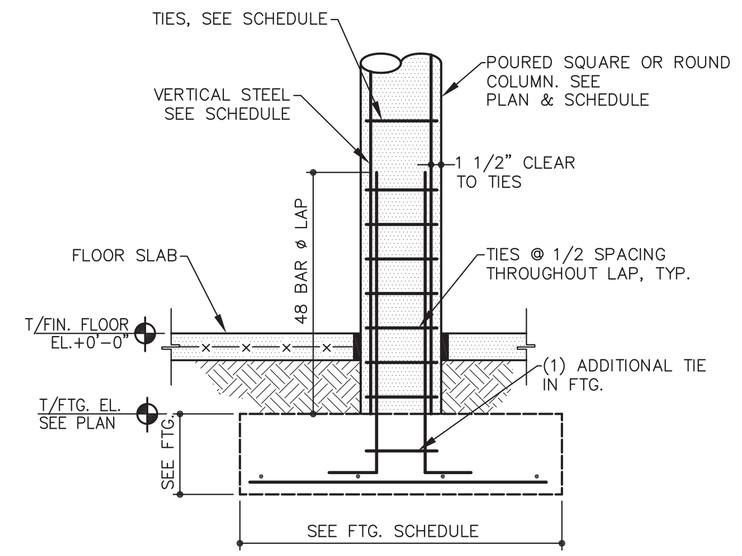

7 SECTION @ CONCRETE COLUMN

8 NOT USED

1. SEMI-RIGID EPOXY SHALL BE PROVIDED IN CONSTRUCTION & SAWCUT JOINTS WHERE EXPOSED TO VEHICULAR TRAFFIC. EPOXY SHALL BE MM80 BY METZGER/McGUIRE OR EUCO 700 BY EUCLID.
2. CONCRETE SHALL AGE A MINIMUM OF 45 DAYS. CHASE THE JOINT WITH A CONCRETE SAW AND BLOW CLEAN W/ COMPRESSED AIR.
3. USE BACKER ROD TO CREATE VERTICAL DAM AT EA END OF THE LEG TO BE FILLED. DO NOT USE BACKER ROD AT THE BOTTOM OF THE JOINT.
4. LEAVE THE SURFACE CROWNED AND GRIND FLUSH AFTER IT HAS HARDENED.

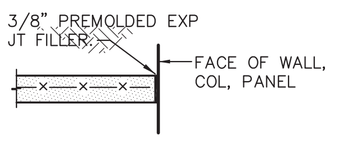

EJ (EXPANSION JOINT)

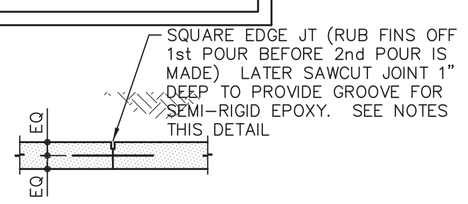

NOTES:
1. USE SMOOTH DWL W/ PROJECTED END COATED TO PREVENT BOND. SEE SCHEDULE BELOW.
2. REINF NOT SHOWN FOR CLARITY. DISCONTINUE REINF @ JT.

SMOOTH DOWEL SCHEDULE			
SLAB DEPTH (IN)	DIAMETER (IN)	TOTAL LENGTH (IN)	SPACING C TO C (IN)
5	5/8	12	12
6	3/4	14	12
7	7/8	14	12
8	1	14	12
9	11/8	16	12
10	11/4	16	12

NOTE: DWLS SHALL BE CUT TO LENGTH NOT SHEARED. GRIND ANY BURRS SMOOTH FROM PROJECTED END.

CJ (CONSTRUCTION JOINT – DOWELLED)

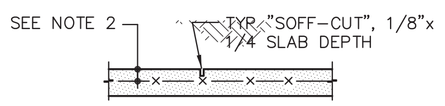

NOTES:
1. CUT WITHIN SAME DAY OF SLAB PLACEMENT.
2. PLACE REINF 1/3 SLAB DEPTH FOR SLABS GREATER THAN 5". 1 1/2" CLR FOR SLABS 5".
3. SEE SEMI-RIGID NOTES THIS DTL.

SJ (SAWCUT JOINT)

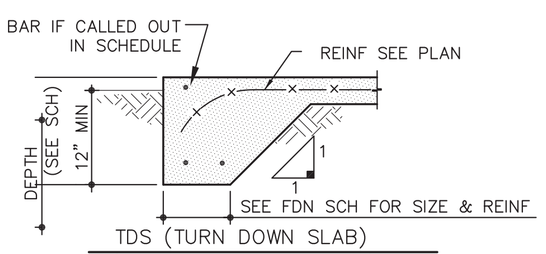

TDS (TURN DOWN SLAB)
(SEE FOOTING SCHEDULE)

A SLAB-ON-GRADE DETAILS FOR 4" & THICKER SLABS

NTS

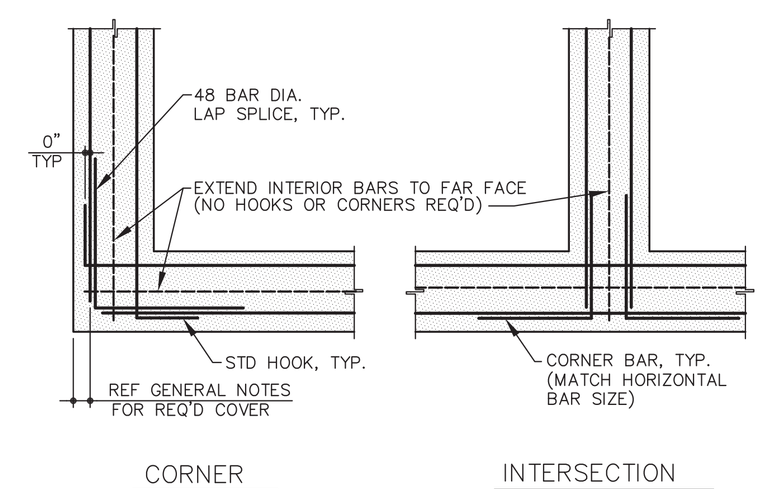

CORNER INTERSECTION

B CORNER BAR DETAIL

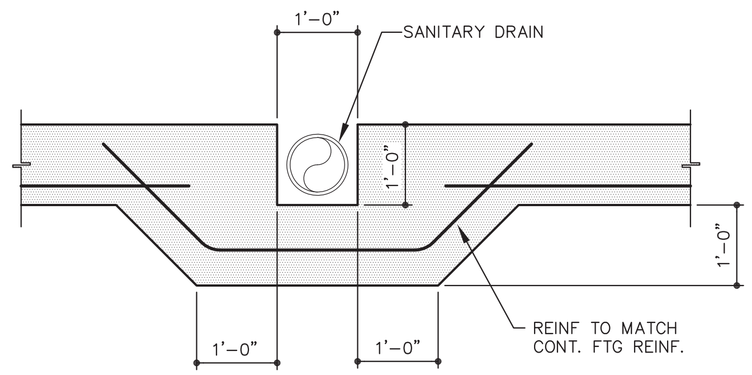

C SECTION @ BLOCK OUT AS REQ.

THIS DOCUMENT CONTAINS COPYRIGHTED MATERIAL AND TRADE SECRET INFORMATION BELONGING EXCLUSIVELY TO WILLIAMSON DAGAR ASSOCIATES, INC. ANY UNAUTHORIZED USE, DISCLOSURE, DUPLICATION OR APPLICATION OF ANY OF THE INFORMATION CONTAINED HEREIN MAY RESULT IN LIABILITY UNDER APPLICABLE LAWS.

JOHNSON STRUCTURAL GROUP
E.B. #00008893
MARK JOHNSON, P.E. #51983, SECB
3500 N.W. Boca Raton Blvd. Suite #618
Boca Raton, FL. 33431
(P)(561) 982-8999 (F)(561) 982-8899
EMAIL: mark.j@johnsonstructural.com
WWW.JOHNSONSTRUCTURAL.COM
COPYRIGHT © 2016, JOHNSON STRUCTURAL GROUP, INC.

Architect: AA 0002541
Engineering: EB 0006884

MARK JOHNSON LICENSE NO. 51983 STATE OF FLORIDA PROFESSIONAL ENGINEER

Digitally signed by Mark Johnson, PE 51983
Date: 2016.06.15 08:44:57 -04'00'

WELLINGTON GREEN PARCEL "F"
PHASE II RETAIL "H" MODIFICATION
PETITION NO. 16-18 (2016-08 ASA 53)
2545 SOUTH STATE ROAD 7
WELLINGTON, FLORIDA 33414

Revisions of Drawings

No.	Date	Revisions

Issues of Drawings

No.	Date	Issues
1	06.15.16	100% CD – PERMIT SET

Phase:
Checked:
Drawn: 3/4"=1'-0"
Drawing Title: STRUCTURAL DETAILS

WDA Proj. No.: 1526-01
Owner Proj. No.:
Scale:
Sheet No.: S4.0
No. of Sheets.:

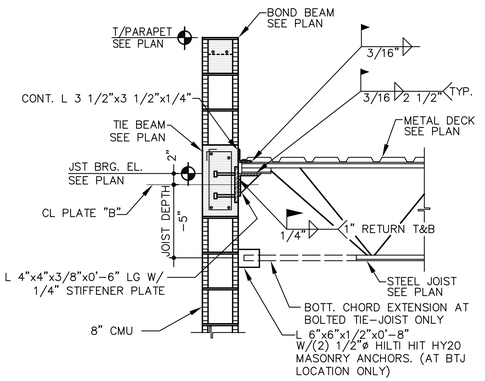

1 **SECTION @ K-JOIST BEARING**

SCALE: 3/4"=1'-0" TYP. U.N.O.

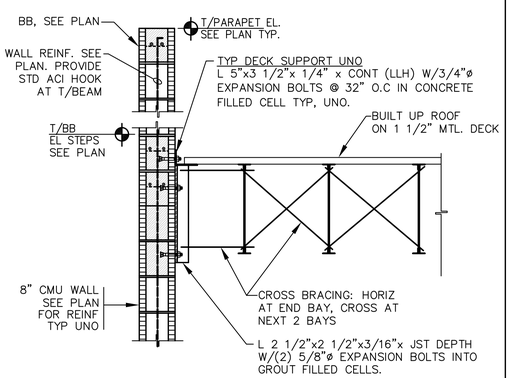

2 **SECTION @ BRIDGING**

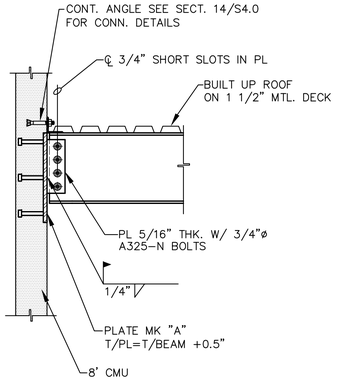

3 **BEAM TO CMU WALL CONNECTION**

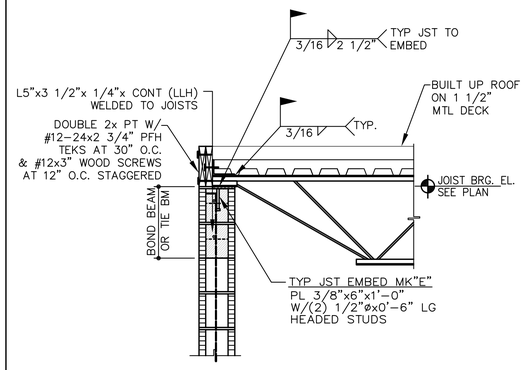

4 **SECTION @ SHED ROOF JST BRG.**

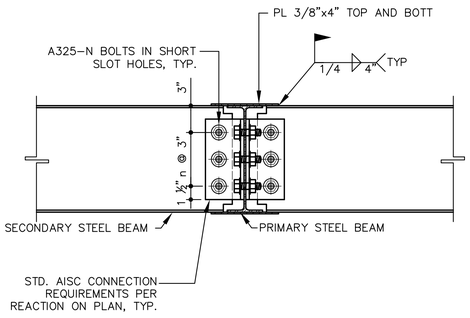

5 **SECTION @ OUTRIGGER TO PRIMARY**

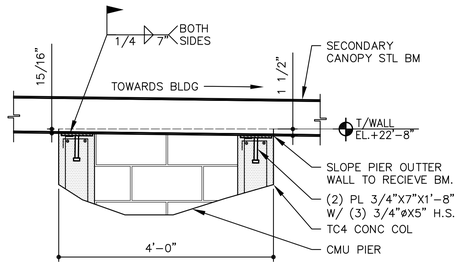

6 **SECTION @ CANOPY BM TO WALL**

7 **NOT USED**

8 **NOT USED**

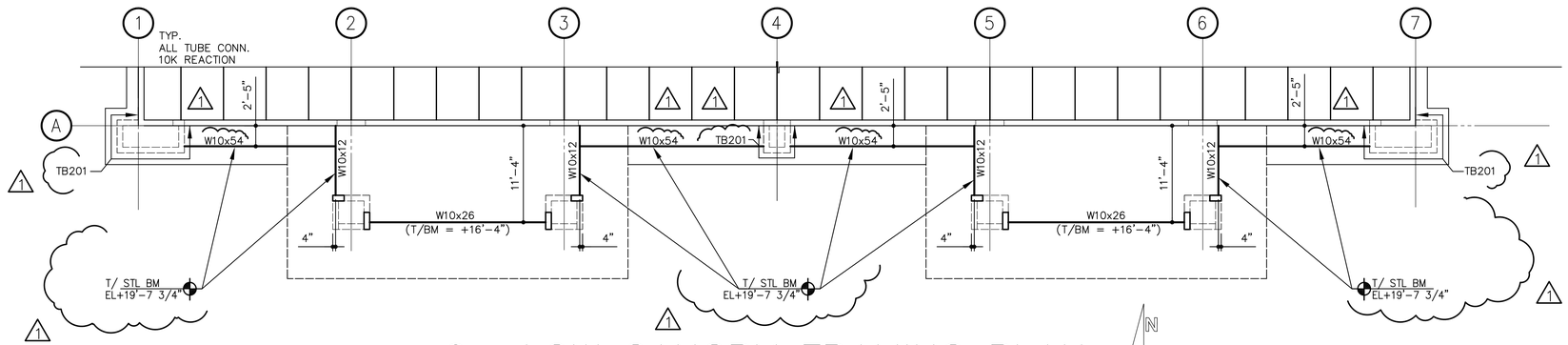

9— **LOW CANOPY FRAMING PLAN**

SCALE: 1/8"=1'-0"

THIS DOCUMENT CONTAINS COPYRIGHTED MATERIAL AND TRADE SECRET INFORMATION BELONGING EXCLUSIVELY TO WILLIAMSON ACAR ASSOCIATES, INC. AND UNAUTHORIZED USE, DISCLOSURE, DISSEMINATION, OR EXPLOITATION OF ANY OF THE INFORMATION CONTAINED HEREIN MAY RESULT IN LIABILITY UNDER APPLICABLE LAWS.

JOHNSON STRUCTURAL GROUP
E.B. #00008893
MARK JOHNSON, P.E. #51983, SECB
3500 N.W. Boca Raton Blvd. Suite #618
Boca Raton, FL. 33431
(P)(561) 982-8999 (F)(561) 982-8899
EMAIL: mark@johnsonstructural.com
WWW.JOHNSONSTRUCTURAL.COM
COPYRIGHT © 2016, JOHNSON STRUCTURAL GROUP, INC.

Architect: AA 0002541
Engineering: EB 0006884

MARK JOHNSON LICENSE NO. 51983 STATE OF FLORIDA PROFESSIONAL ENGINEER

WELLINGTON GREEN PARCEL "F"
PHASE II RETAIL "H" MODIFICATION
PETITION NO. 16-18 (2016-08 ASA 53)
2545 SOUTH STATE ROAD 7
WELLINGTON, FLORIDA 33444

Revisions of Drawings

No.	Date	Revisions
1	07.01.16	DESIGN REVISION

Issues of Drawings

No.	Date	Issues
1	06.15.16	100% CD – PERMIT SET

Phase:
Checked:
Drawn: 3/4"=1'-0"
Drawing Title: STRUCTURAL DETAILS

WDA Proj. No.: 1526-01
Owner Proj. No.:
Scale:
Sheet No.: S4.1
No. of Sheets.:

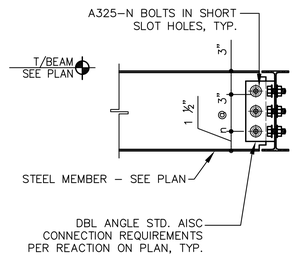

1 SECTION @ STEEL BM. TO BM. CONN.

SCALE: 3/4"=1'-0" TYP. U.N.O.

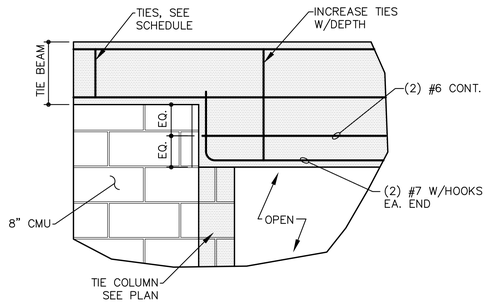

2 ELEVATION @ DROPPED TB

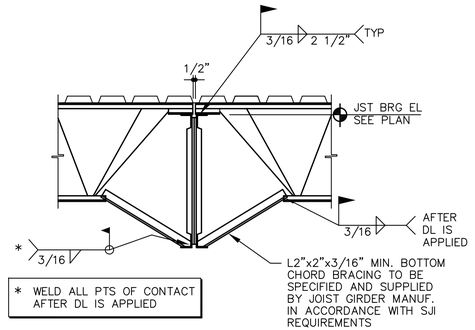

3 SECTION @ JOIST TO GIRDER

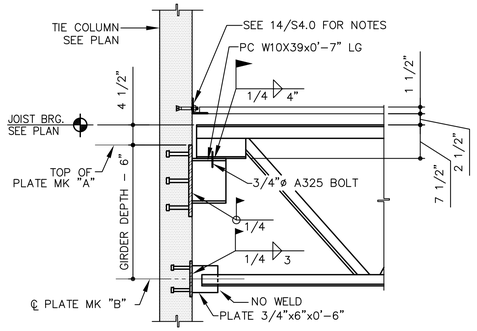

4 SECTION @ ROOF GIRDER BEARING

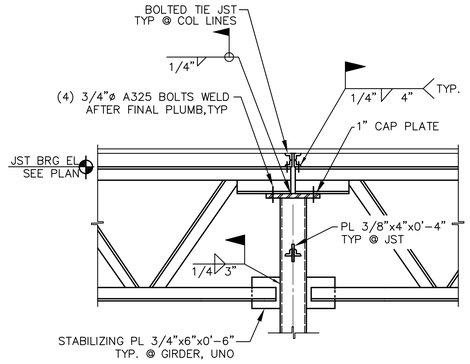

5 SECT. @ GIRDER TO COL

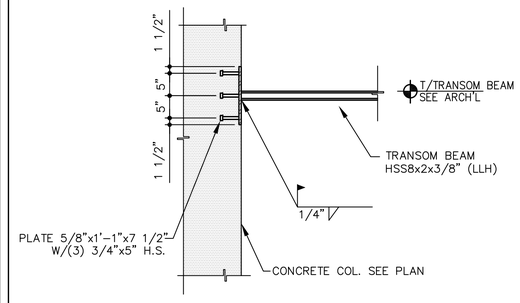

6 TRANSOM CONN. @ ARCHED BEAMS

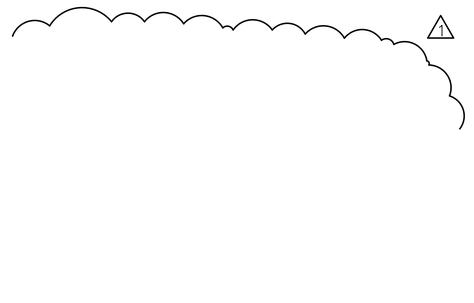

7 NOT USED

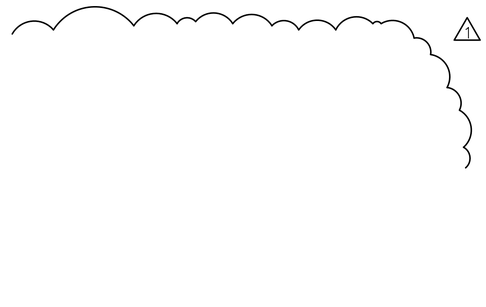

8 NOT USED

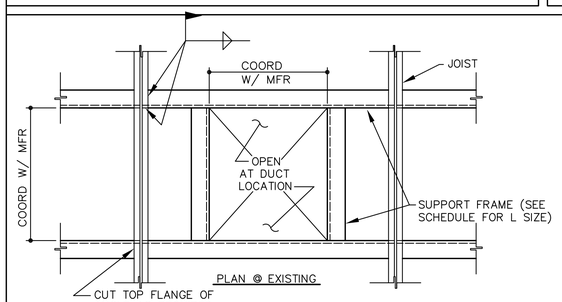

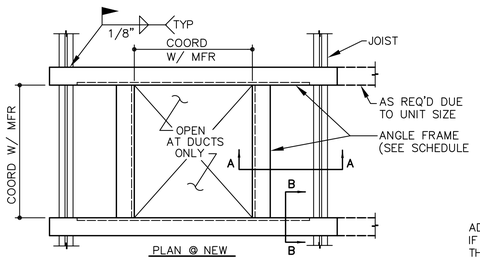

NOTES:

1. VERIFY ALL DIM'S & DETAILS W/ MECH CONTR BEFORE FABRICATION.
2. A/C UNIT TOTAL WEIGHT–SEE PLAN FOR WEIGHT AND FRAME SCHEDULE FOR ANGLE FRAME SIZE.
3. PROVIDE L3x3x1/4 FRAME AT ALL OPNGS GREATER THAN 12" ON ANY SIDE.
4. THE ANGLE FRAME SHALL BE PROVIDED SO THAT THE ENTIRE PERIMETER OF THE RTU CURB IS SUPPORTED.

ROOF TOP UNIT FRAME SCHEDULE		
UNIT WEIGHT	ANGLE SIZE	
0 – 675 lbs	L4x3x1/4	LLH
676 – 1500 lbs	L4x3 1/2x5/16	LLH
1501 – 3000 lbs	L6x4x3/8	LLH
3001 – 6000 lbs	L6x6x3/8	

A DET. MECH ROOF SUPPORT

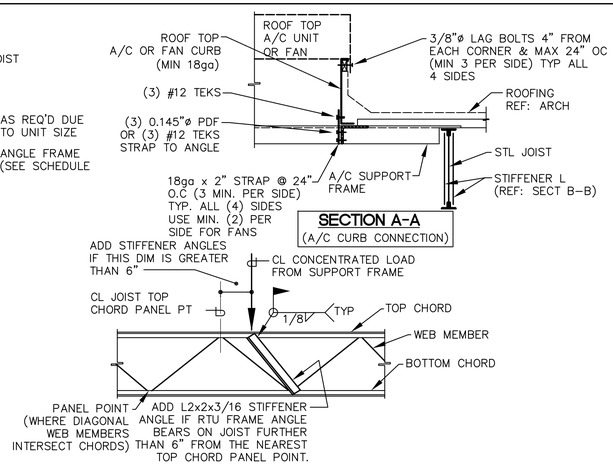

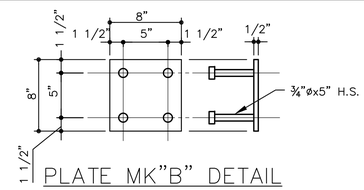

B MK PLATES DETAILS

SCALE: N.T.S.

THIS DOCUMENT CONTAINS COPYRIGHTED MATERIAL AND TRADE SECRET INFORMATION BELONGING EXCLUSIVELY TO WILLIAMSON DACAR ASSOCIATES, INC. AND UNAUTHORIZED USE, DISCLOSURE, COPYING, PUBLICATION OR DISTRIBUTION OF ANY OF THE INFORMATION CONTAINED HEREIN MAY RESULT IN LIABILITY UNDER APPLICABLE LAWS.

JOHNSON STRUCTURAL GROUP
E.B. #00008893
MARK JOHNSON, P.E. #51983, SECB
3500 N.W. Boca Raton Blvd. Suite #618
Boca Raton, FL. 33431
(P)(561) 982-8999 (F)(561) 982-8899
EMAIL: mark@johnsonstructural.com
WWW.JOHNSONSTRUCTURAL.COM
COPYRIGHT © 2016, JOHNSON STRUCTURAL GROUP, INC.

Architect: AA 0002541
Engineering: EB 0006884

MARK JOHNSON LICENSE NO. 51983 STATE OF FLORIDA PROFESSIONAL ENGINEER

WELLINGTON GREEN PARCEL "F"
PHASE II RETAIL "H" MODIFICATION
PETITION NO. 16-18 (2016-08 ASA 53)
2545 SOUTH STATE ROAD 7
WELLINGTON, FLORIDA 33444

Revisions of Drawings		
No.	Date	Revisions
1	07.01.16	DESIGN REVISION

Issues of Drawings		
No.	Date	Issues
1	06.15.16	100% CD – PERMIT SET

Phase:
Checked:
Drawn: 3/4"=1'-0"
Drawing Title: STRUCTURAL DETAILS

WDA Proj. No.: 1526-01
Owner Proj. No.:
Scale:

Sheet No.: S4.2
No. of Sheets.: