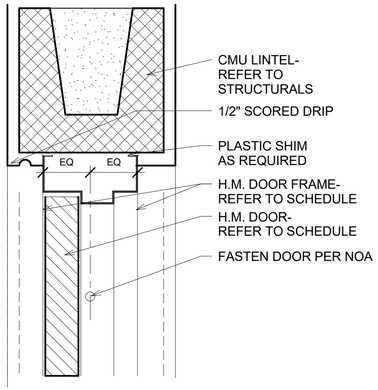

1 H.M. Door Head Detail
3" = 1'-0"

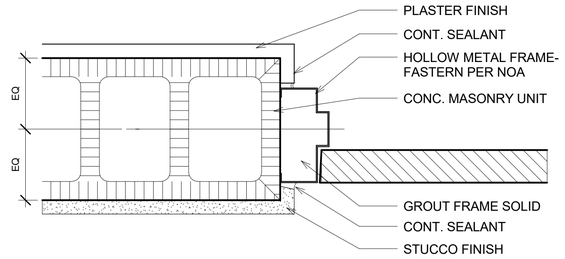

2 H.M. Door Jamb Detail
3" = 1'-0"

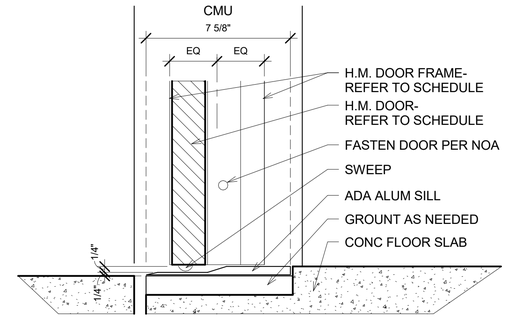

3 H.M. Door Sill Detail
3" = 1'-0"

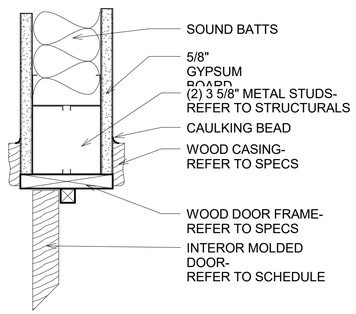

4 Interior Door Head
3" = 1'-0"

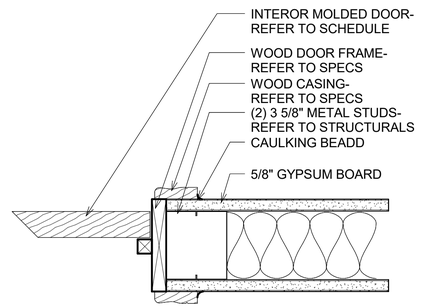

5 Interior Door Jamb
3" = 1'-0"

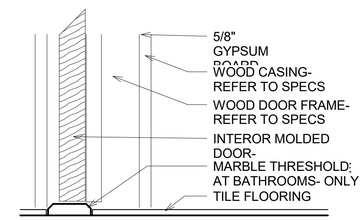

6 Interior Door Sill
3" = 1'-0"

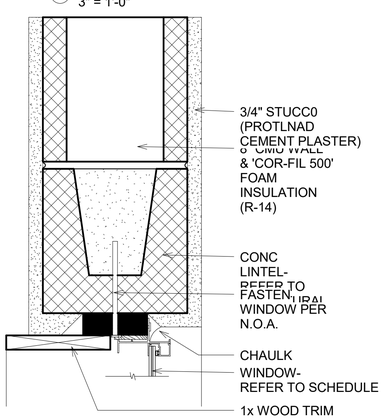

7 Window Head Detail
3" = 1'-0"

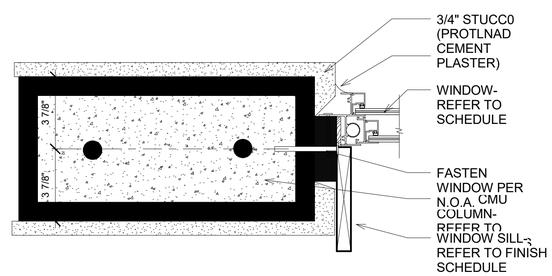

8 Window Jamb Detail
3" = 1'-0"

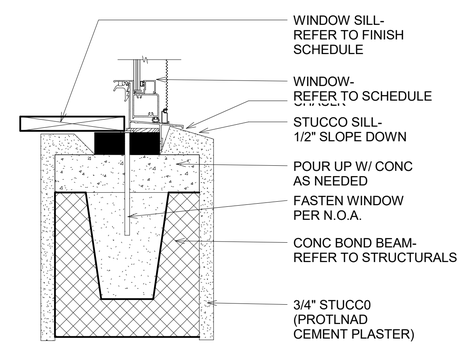

9 Window Sill Detail
3" = 1'-0"

NOTES:
FINISHES WILL VARY -

1. REFER TO FINISH SCHEDULE FOR CONDITIONS OF FINISH

2. ALL OPENING SIZES TO BE VERIFIED WITH MANUFACTURE BEFORE CONSTRUCTION

Eugene R Fagan III Architect #11668

3432 A West 45th Street
West Palm Beach, Fl 33418
(561) 385-4514
Eugene@FaganArchitect.com

Copyrite 2015

3/12/2016 1:06:21 PM

Consultant:
ANDREW MORGAN SERVICES - STRUCTURAL ENGINEER
513 US HIGHWAY 1
SUITE 109
NORTH PALM BEACH, FLORIDA 33408
561-881-8999
AMORGANSERVICES@GMAIL.COM

Consultant
BD BACH DESIGN ENGINEERS - MECHANICAL ENGINEERS
381 S.E. 10TH STREET
POMPANO BEACH, FLORIDA 33060
954-461-4314
BACH@BACHENGINEERS.COM

Seal

No.	Description	Date

Sea Ya Holdings

Mary Circle

DETAILS

Project number	Project Number
Date	Issue Date
Drawn by	Author
Checked by	Checker

A-7.1

Scale	3" = 1'-0"