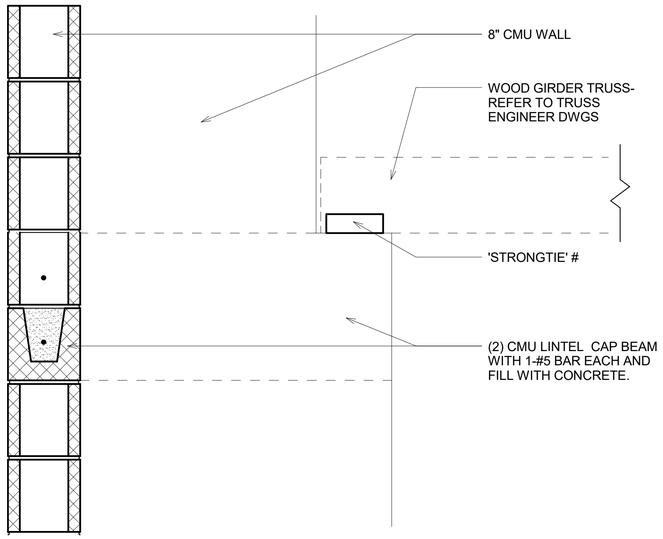

1 ELEVATION DETAIL A
1 1/2" = 1'-0"

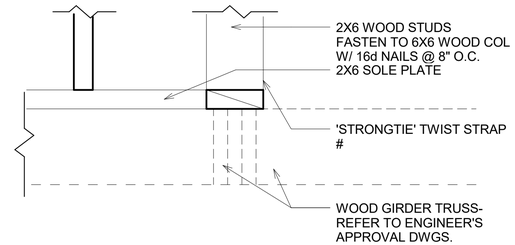

3 ELEVATION DETAIL B
1 1/2" = 1'-0"

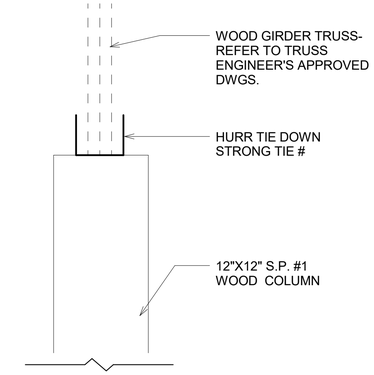

5 COLUMN CAP ELEVATION C
1 1/2" = 1'-0"

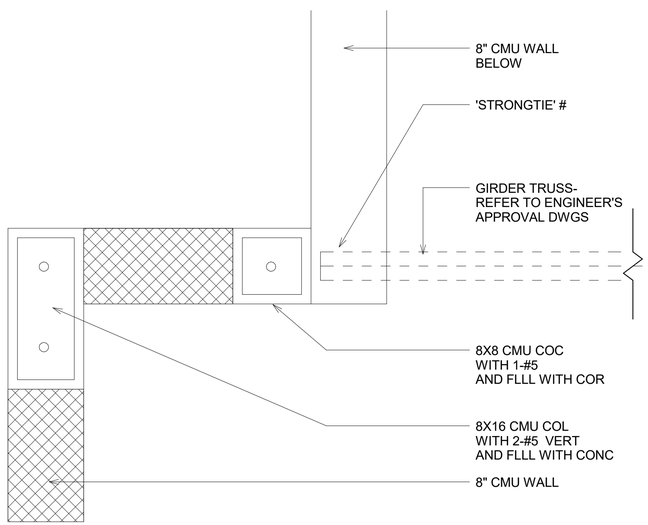

2 PLAN DETAIL A
1 1/2" = 1'-0"

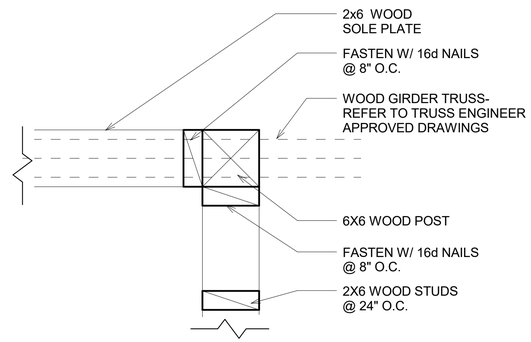

4 PLAN DETAIL B
1 1/2" = 1'-0"

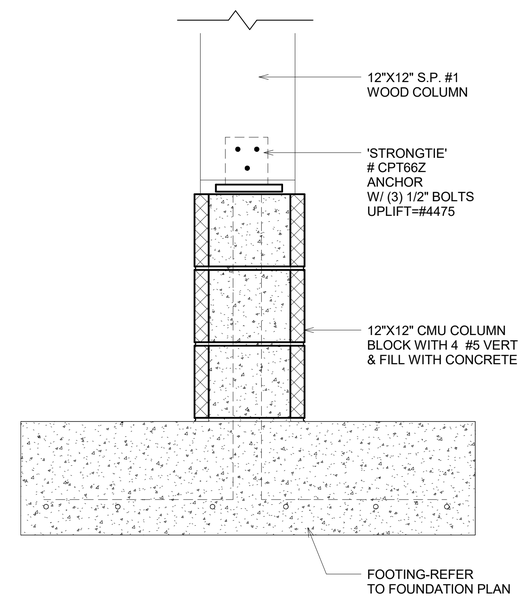

6 COLUMN BASE ELEVATION DETAIL C
1 1/2" = 1'-0"

Eugene R Fagan III Architect #11668

3432 A West 45th Street
West Palm Beach, Fl 33418
(561) 385-4514
Eugene@FaganArchitect.com

Copyrite 2015

3/12/2016 1:06:27 PM

Consultant
Address
Address
Phone
Fax
e-mail

Consultant
Address
Address
Phone
Fax
e-mail

Consultant
Address
Address
Phone
Fax
e-mail

Seal

No.	Description	Date

Sea Ya Holdings

Mary Circle

STRUCTURAL DETAILS

Project number	Project Number
Date	Issue Date
Drawn by	Author
Checked by	Checker

SH-1.4

Scale	1 1/2" = 1'-0"