874 Dixon Boulevard
Cocoa, FL 32922
Phone: 321-636-0274
Fax: 321-639-8986
www.tlc-engineers.com
© Copyright 2015 TLC Engineering for Architecture, Inc.
EB #0000015 TLC NO: 515185

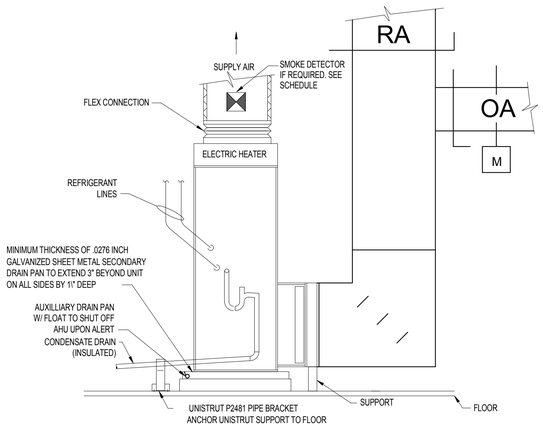

NOTES:
1. PROVIDE 36" CLEARANCE IN FRONT OF AHU AND 4" CLEARANCE FOR THE REST OF THE AHU.
2. INSULATE CD DRAIN.
3. PROVIDE SMOKE DECTORS IN SUPPLY OF UNITS

TYPICAL VERTICAL AHU INSTALLATION

NTS (FOR VERTICAL DRAW THRU UNITS.)

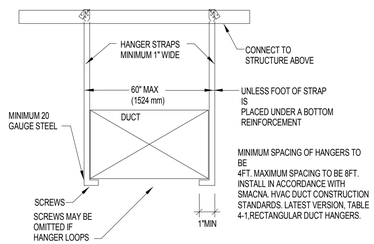

DUCT SUPPORT DETAIL

NTS

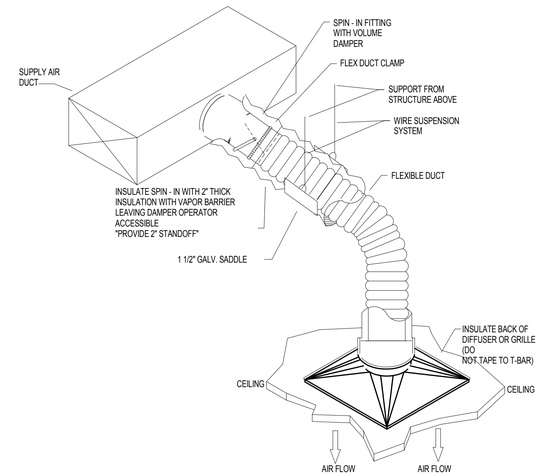

DUCT/DIFFUSER TYPICAL DETAIL

NTS

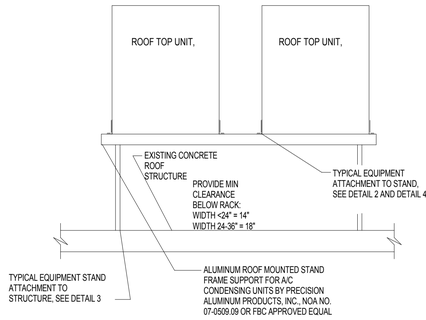

1 **TYPICAL EQUIPMENT STAND ELEVATION**

NTS

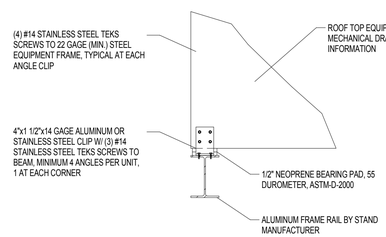

2 **TYPICAL EQUIPMENT ATTACHMENT TO STAND BEAM**

NTS

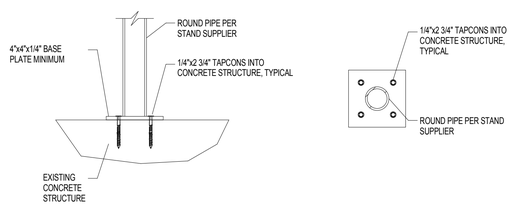

SECTION **PLAN**

3 **TYPICAL STAND ATTACHMENT TO STRUCTURE**

NTS

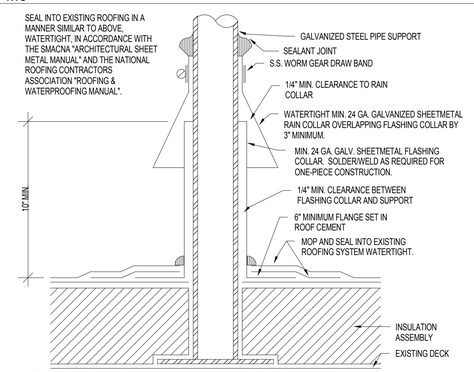

4 **TYPICAL ROUND SUPPORT FLASHING DETAIL**

NTS

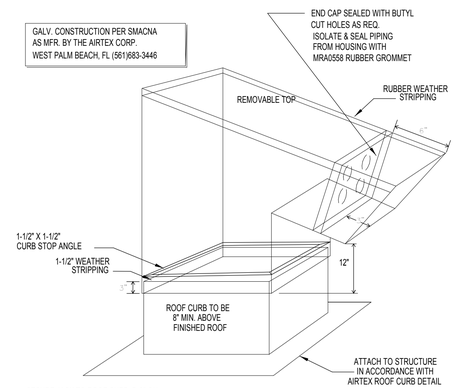

PIPING ROOF JACK

NTS

GRANFIELD ARCHITECTS
1668 N.E. JENSEN BEACH BLVD
JENSEN BEACH, FLORIDA 34957
PHONE: 772-283-6052
FAX: 772-283-8153

COMMERCIAL - RESIDENTIAL - INSTITUTIONAL DESIGN

PROPOSED ORTHODONTISTS OFFICE FOR:
DR. VAKANI
EDGARCE ST, PORT ST. LUCIE, FLORIDA

JAMES T WAMSLEY, P.E.
Florida License #50343

REVISIONS
REVISION 1 2/4/16

JOB NO.	11-523
DATE	01.28.16
DRAWN BY	LTB
CHECKED BY	JTW

SHEET
M-3
OF

4/25/2016 2:02:35 PM C:\Users\dylan.sauro\Desktop\REVIT SHIT\Revit 2016\515185_Dr Vakani Reuse_MEP_Central_R16.rvt