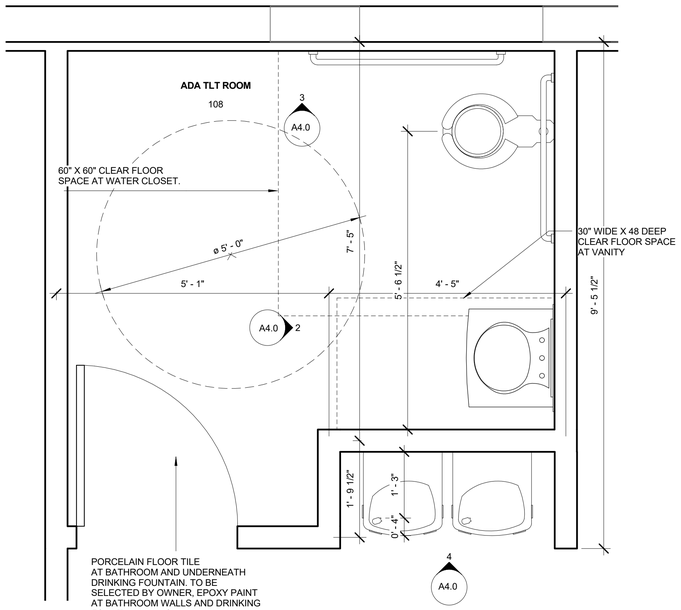

1 / A4.0 ENLARGED FLOOR PLAN
3/4" = 1'-0"

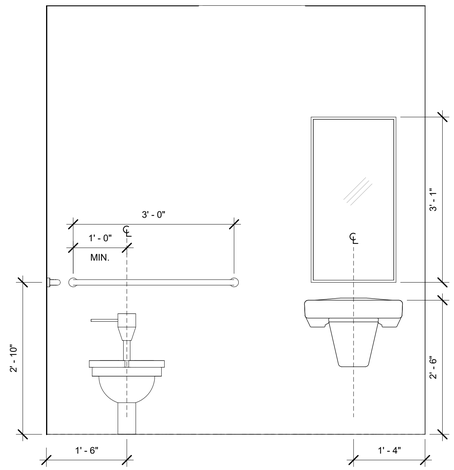

2 / A4.0 TYPICAL INTERIOR BATHROOM ELEVATION
3/4" = 1'-0"

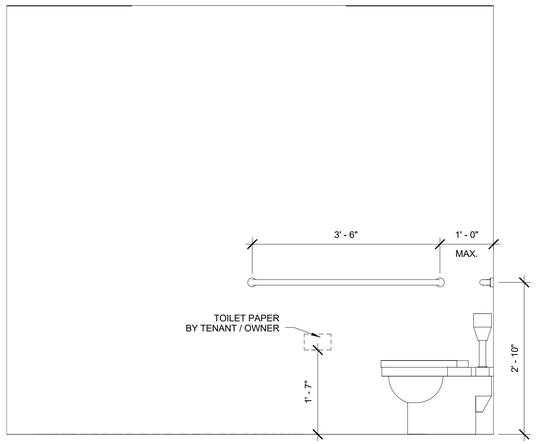

3 / A4.0 TYPICAL BATHROOM INTERIOR ELEVATION-SIDE
3/4" = 1'-0"

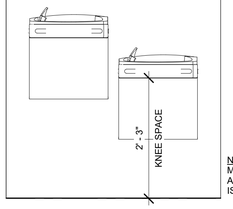

NOTE:
MOUNT ADA WATER FOUNTAIN
AS PER ADA HEIGHT WHERE SPOUT
IS AT ABOVE 36" ABOVE FINISH FLOOR.

4 / A4.0 TYPICAL FOUNTAIN MOUNTING ELEVATION
3/4" = 1'-0"

PLUMBING SCHEDULE				
FIXTURE	MANUFACTURER	MANUFACTURER	SUPPLIED BY	INSTALLED BY
ADA LAV	AMERICAN STANDARD WALL MOUNT	WHEELCHAIR USERS LAV	G.C	G.C
ADA LAV FAUCET	AMERICAN STANDARD	HERITAGE TWO-HANDED CENTERSET LAVATORY FAUCET WITH 172 H 4 INCH ADA WRIST BLADE HANDLE	G.C	G.C
			G.C	G.C
ADA W/C	WALL MOUNT TOTO	CT708EG	G.C	G.C
ADA W/C FLUSH VALVE	TOTO	TMU1LN	G.C	G.C
36" GRAB BAR	BOBRICK	B6806 SERIES	G.C	G.C
42" GRAB BAR	BOBRICK	B6806 SERIES	G.C	G.C
MIRROR	BOBRICK	B-165 SERIES	G.C	G.C
TOILET PAPER HOLDER	BY TENANT	BY TENANT	BY TENANT	BY TENANT
DRINKING FOUNTAIN	OASIS	P8ACSL WITH REFRIGERATION	G.C	G.C

CCS
ARCHITECTURAL ENTERPRISES, INC.
499 East Palmetto Park Rd.
Suite 204
Boca Raton, FL 33432

T 561.479.9884
www.ccsarch.com
Florida Registration Number
AA26001852

CONSULTANTS:

STRUCTURAL ENGINEERING:

STRUCTURES INTERNATIONAL, INC.
7501 Wiles Rd,
Coral Springs, FL 33067
(954) 227-1512

ELECTRICAL, MECHANICAL, PLUMBING:

AMERICAN UNITED ENGINEERS
4508 SW 24TH STREET
FORT LAUDERDALE, FL 33317
PHONE: (954) 471-8657

PROJECT:

BAY 37
WESTGATE SHOPPING CENTER
100 N STATE ROAD 7
PLANTATION, FL 33317

INTERIOR IMPROVEMENTS

FINAL CONTRACT DOCUMENTS

PROJECT NUMBER: 1600-3

DATE: JUNE 6, 2016

ADDENDA/REVISION

No.	Date	Description

SEAL:

CYNTHIA C. SPRAY, AIA AR-94167

DRAWING TITLE:

BATHROOM TYPICAL ENLARGED PLANS AND INTERIOR ELEVATIONS

DRAWING NO:

A4.0