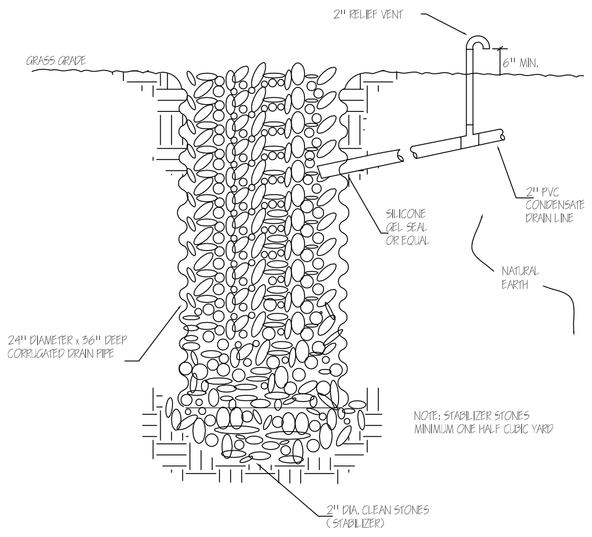

CONDENSATE DRYWELL DETAIL

PLUMBING SPECIFICATIONS:

WATER CLOSET (FLOOR)	AMERICAN STANDARD "CHAMPION". MODEL #2186.016 COLOR WHITE. SEAT MODEL #5925.CHO COLOR WHITE.
WATER CLOSET (HANDICAP) (FLOOR)	AMERICAN STANDARD "CADET" 16-1/2" PH. MODEL #2467.016 COLOR WHITE. SEAT MODEL #5924.CHP COLOR WHITE. INSTALLED 30" TOP OF SEAT 17"-19" FROM FINISHED FLOOR.
URINAL (WALL-HUNG)	AMERICAN STANDARD "TIMBERLOCK" MODEL #6168.017 COLOR WHITE FLUSH VALVE "#6.0 ON ROYAL" MODEL #1156-1.
URINAL (HANDICAP) (WALL-HUNG)	AMERICAN STANDARD "TIMBERLOCK" MODEL #6168.017 COLOR WHITE FLUSH VALVE "#6.0 ON ROYAL" MODEL #1156-1. MT. 17" TO TOP OF RIM FOR HANDICAPPED USE.
LAVATORY (HANDICAP) (WALL-HUNG)	AMERICAN STANDARD "CLARAGE" MODEL #0124.024 COLOR WHITE FAUCET SET AMERICAN STANDARD "HELENA" MODEL #7385.046.
LAVATORY (HANDICAP) (COUNTER TOP)	AMERICAN STANDARD "STANDARD COLLECTION" MODEL #0299.004. VITREOUS CHINA. COLOR WHITE. FAUCET SET AMERICAN STANDARD "PRINCETON" MODEL #4605.BCL.BCL.
MOP SINK (SQUARE - FLOOR)	ZURN. MODEL #Z1996-24-MH-SF. MOLDED HIGH DENSITY COMPOSITE BASIN. PVC DRAIN BODY. STAINLESS STEEL STONE STRAINER / LINT BASKET, AND 3" GASKETED OUTLET CONNECTION WITH HOSE & HOSE BRACKET. CHROME PLATED SERVICE FAUCET. COMPLETE WITH VACUUM BREAKER. INTEGRAL STOPS. ADJUSTABLE WALL BRACE. PAIL HOOK. FOUR-ARM HOT & COLD HANDLES & 3/4" HOSE THREAD ON SPOUT.
HIGH-LOW WATER COOLER (HANDICAP)	ELECTRIC HALO WATER COOLER HALSEY TAYLOR. MODEL #HAC8FSSL-TQ CHILD SS
SHOWER SET	DELTA "SERIES 1500" MODEL #1525. WITH PRESSURE VALVE.
FLOOR DRAIN	ZURN MODEL #Z2232-MP. QUIKA-CORED CAST IRON BODY. EMBEDDED PIPE CONNECTION. ADJUSTABLE COLLAR. AND TRAP PRIMER CONNECTION.
FLOOR SINK	ZURN MODEL #Z18202-S. ACID RESISTING PORCELAIN ENAMEL COATED CAST IRON BODY. 5 / 4 GRATE.
WATER HEATER	ELECTRIC WATER HEATER. 80 GALLON. MANUFACTURER AO SMITH. MODEL # DEN-80. 4.5KW SINGLE ELEMENT. 208V SINGLE PHASE. WITH ASME PRESSURE AND TEMPERATURE RELIEF VALVE. WITH COMPLETE CONTROLS. ADJUSTABLE THERMOSTATS. HIGH TEMPERATURE CUTOFF. U.L. LISTED. SET AT 80° F.
MIXING VALVE	WATTS MODEL # MAV. THERMOSTATIC DOUBLE THROTTLING MIXING VALVE MAINTAINS AND LIMITS MIXED HOT WATER BETWEEN 80°F AND 120°F. COMPLETE WITH ASSE 1070.
RECIRCULATING PUMP	TACO MODEL #007-F9. CAST-IRON. WET-ROTOR. IN-LINE. SINGLE STAGE CIRCULATOR PUMP. CARTRIDGE STYLE.

NOTES:

- OR APPROVED EQUAL TO BE SELECTED BY OWNER.

1. MOUNTING HEIGHT PER ADA STANDARDS. INSULATE WATER AND DRAIN LINE.
2. PROVIDE CUT SHEETS FOR REVIEW PRIOR TO PURCHASE.
3. PLUMBING FIXTURES TO COMPLY WITH TABLE 604.4 F.B.C.
4. ALL WALL HUNG PLUMBING FIXTURES SHALL COMPLY WITH F.B.C. 2417.3.11. 2417.3.12 AND 2417.3.13
5. ALL EXPOSED PIPING AND SURFACES UNDER LAVATORIES SHALL COMPLY WITH FLORIDA BUILDING CODE ACCESSIBILITY SEC. 606.3.

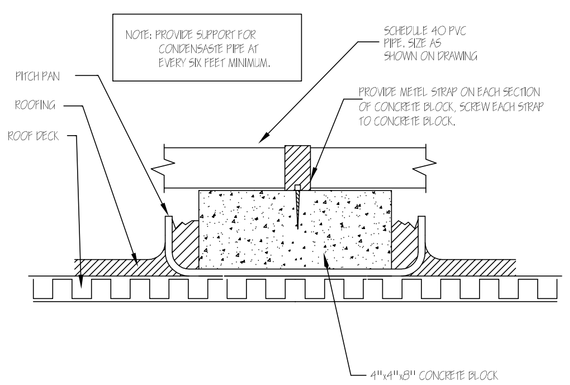

CONDENSATE MOUNTING DETAIL

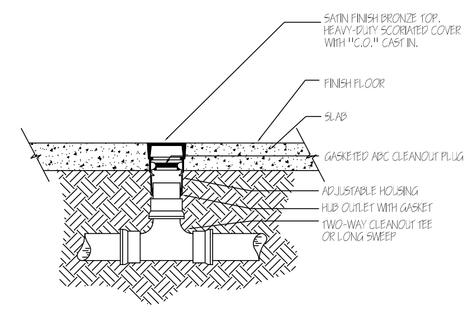

FLOOR CLEAN-OUT (FCO) DETAIL

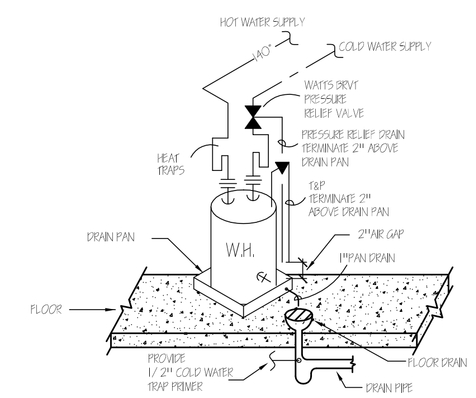

WATER HEATER DETAIL

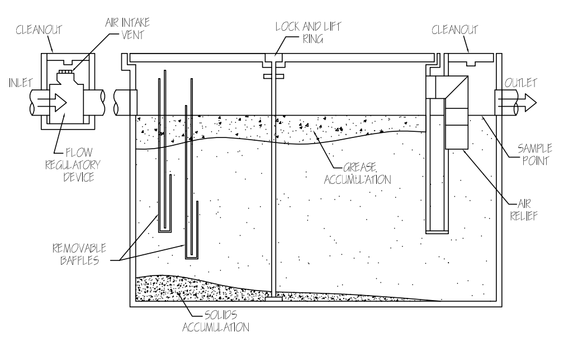

GREASE INTERCEPTOR DETAIL

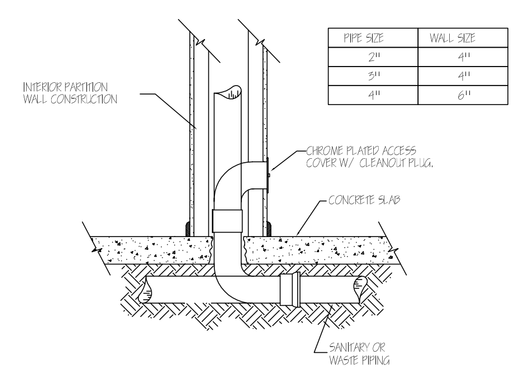

PIPE SIZE	WALL SIZE
2"	4"
3"	4"
4"	6"

WALL CLEAN-OUT DETAIL

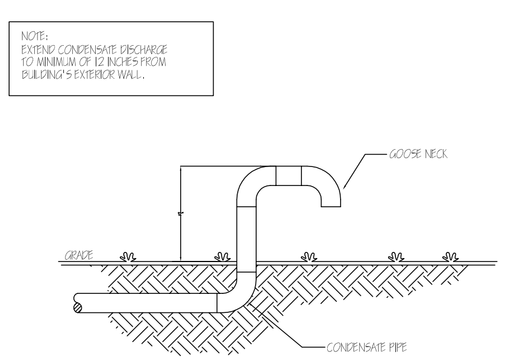

CONDENSATE DISCHARGE DETAIL

PLUMBING SPECIFICATIONS:

ALL WORK SHALL BE DONE IN ACCORDANCE WITH THE FLORIDA BUILDING CODE 2014 EDITION PLUMBING SECTION AND SHALL COMPLY WITH ALL LOCAL RULES AND ORDINANCES.

1. ALL WORKMANSHIP & MATERIALS SHALL BE IN STRICT ACCORDANCE WITH APPLICABLE NATIONAL STATE, LOCAL CODES, RULES & ORDINANCES.
2. CONTRACTOR SHALL VISIT THE JOB SITE & THOROUGHLY FAMILIARIZE HIMSELF WITH ALL EXISTING CONDITIONS.
3. ALL MATERIALS SHALL BE NEW.
4. ALL WORK SHALL BE PERFORMED BY A LICENSED PLUMBING CONTRACTOR IN A FIRST-CLASS WORKMANLIKE MANNER. THE COMPLETE SYSTEM SHALL BE FULLY OPERATIVE.
5. ALL EXCAVATION & BACK FILL AS REQUIRED FOR THIS PHASE OF CONSTRUCTION SHALL BE A PART OF THIS CONTRACT.
6. REQUIRED INSURANCE SHALL BE PROVIDED BY THIS CONTRACTOR FOR PROTECTION AGAINST PUBLIC LIABILITY & PROPERTY DAMAGE FOR THE DURATION OF WORK.
7. CONTRACTOR SHALL PAY FOR ALL PERMITS, FEES, INSPECTIONS & TEST. SUBSTITUTIONS BY THE CONTRACTOR SHALL HAVE PRIOR APPROVAL. ANY CHANGES MADE WITHOUT APPROVAL WILL BE PAID BY THE CONTRACTOR TO RETURN TO THE ORIGINAL DESIGN.
8. EXISTING PIPE SIZES TO BE VERIFIED BY THE PLUMBER AND SHALL BE UPGRADED IF NOT LARGE ENOUGH TO ACCOMMODATE THE LOAD.
9. ALL WORK SHALL BE COORDINATED WITH OTHER TRADES TO AVOID INTERFERENCE WITH THE PROCESS OF CONSTRUCTION.
10. THE CONTRACTORS AND SUBCONTRACTORS SHALL BE RESPONSIBLE FOR REVIEW OF THE GENERAL NOTES, SPECIFICATIONS, AND ALL OTHER DRAWINGS FOR ADDITIONAL REQUIREMENTS WHICH MAY NOT BE SPECIFICALLY CALLED OUT IN THIS PORTION OF THE CONSTRUCTION DOCUMENTS.
11. DRAWINGS FOR PLUMBING WORK ARE DIAGRAMMATIC, SHOWING THE GENERAL LOCATION, TYPE, LAYOUT, AND EQUIPMENT REQUIRED. THE DRAWINGS SHALL NOT BE SCALED FOR EXACT MEASUREMENT. FIELD VERIFY FINAL LOCATIONS FOR EQUIPMENT. REFER TO ARCHITECTURAL DRAWINGS FOR DIMENSIONS AND EXACT LOCATION OF PLUMBING FIXTURES. REFER TO MANUFACTURER'S STANDARD INSTALLATION DRAWINGS FOR EQUIPMENT CONNECTIONS AND INSTALLATION REQUIREMENTS.
12. DRAWINGS AND SPECIFICATIONS GOVERN WHERE THEY EXCEED CODE REQUIREMENTS.
13. VERIFY LOCATION, SIZE, TYPES, INVERTS OF ALL EXISTING UTILITIES PRIOR TO BEGINNING CONSTRUCTION. ADVISE ENGINEER OF ANY DISCREPANCIES. ANY COST RESULTING FROM DISCREPANCIES NOT REPORTED AT THIS TIME SHALL BE PAID BY THE CONTRACTOR.
14. INSTALL SIOUX CHIEF 690 SERIES SHOCK ARRESTORS IN PIPING TO QUICK-CLOSING VALVES AS DEFINED IN FLORIDA PLUMBING CODE.
15. PROVIDE SHUT-OFF VALVES IN THE SUPPLY PIPING TO EVERY FIXTURE.
16. ALL FIXTURES MUST BE PROVIDED WITH READILY ACCESSIBLE STOPS.
17. CAP ALL PIPING OPENINGS DURING CONSTRUCTION UNTIL FINAL CONNECTIONS TO EQUIPMENT AND ACCESSORIES ARE MADE.
18. SANITARY PIPE 2½" 2" AND SMALLER SHALL BE SLOPED AT 1/4" PER FOOT. SANITARY PIPE 3" AND LARGER SHALL BE SLOPED AT 1/8" PER FOOT. CONDENSATE PIPING SHALL BE SLOPED AT A MINIMUM OF 1/4" PER FOOT.
19. ALL FLOOR PENETRATIONS MUST BE SLEEVED, PIPE STOPPED, GROUTED, SEALED AND MADE WATERPROOF IN ACCORDANCE WITH THE LANDLORDS REQUIREMENTS. SLEEVES MUST EXTEND A MINIMUM OF 4" A.F.F. COORDINATE ALL CONCRETE TRENCHING/ CORING TO ENSURE THAT ANY UNDER SLAB UTILITIES, ETC., ARE NOT DAMAGED DURING FLOOR CUT. ANY DAMAGE TO BE REPAIRED AT CONTRACTOR EXPENSE. CUTTING AND PATCHING ACTIVITIES WHICH CREATE NOISE MUST BE PERFORMED AFTER HOURS SO LONG AS ANY OTHER TENANTS ARE OCCUPYING THE BUILDING. PRIOR APPROVAL AND COORDINATION WITH PROPERTY MANAGEMENT IS REQUIRED FOR ALL CONCRETE CUTTING.
20. DO NOT ROUTE ANY WET PIPING OVER ELECTRICAL EQUIPMENT.
21. WATER PIPING TO BE TYPE "L" COPPER ABOVE AND TYPE "K" COPPER BELOW GRADE.
22. SOIL, WASTE & VENT PIPING TO BE P.V.C., # 40 DWV. CAST IRON SHALL BE USED IN COMMON PLENUM AREAS.
23. HOT AND HOT WATER RETURN LINES SHALL BE INSULATED WITH 1" THICK ARMAFLEX INSULATION FROM THE WATER HEATER TO THE FURTHEST FIXTURE PER 2014 FBC - ENERGY CONSERVATION CODE, CHAPTER 4 AND TABLE C403.2.8.
24. WHERE DISSIMILAR METALS ARE TO BE JOINED, APPROVED INSULATING UNIONS SHALL BE USED.
25. ALL PLUMBING PIPES PENETRATING FIRE RATED WALLS, CEILINGS AND/ OR FLOORS SHALL BE PROVIDED WITH U.L. APPROVED FIRE RATED ASSEMBLY. (EQUAL TO WALL FIRE RATING - SEE ARCHITECTURAL DRAWINGS).
26. NO PVC PIPING TO BE USED IN COMMON PLENUM AREAS.
27. CONDENSATE LINES TO BE COPPER/ PVC DEPENDING ON PROJECT REQUIREMENTS. INSULATE WITH 1/ 2" THICK ARMAFLEX INSULATION
28. FLUSH OUT EXISTING WATER PIPING. STERILIZE THE NEW WATER PIPING LINES BY INTRODUCING IN THEM A SOLUTION OF CALCIUM HYPOCHLORITE OR CHLORIDE OF LIME. OPEN AND CLOSE ALL NEW VALVES WHILE SYSTEM IS BEING CHLORINATED. AFTER THE STERILIZING AGENT HAS BEEN APPLIED FOR 24 HOURS, TEST FOR RESIDUAL CHLORINE AT THE ENDS OF LINES. IF LESS THAN 10 PARTS PER MILLION IS INDICATED, REPEAT THE PROCESS. WHEN TESTS SHOW AT LEAST 10 PARTS PER MILLION OF RESIDUAL CHLORINE, FLUSH OUT THE SYSTEM UNTIL ALL TRACES OF THE CHEMICAL USED ARE REMOVED. MAKE NECESSARY CONNECTIONS TO STERILIZE PIPING.
29. AFTER STERILIZATION HAS BEEN ACCOMPLISHED IN WHAT IS BACTERIOLOGICAL TEST PERFORMED BY AN APPROVED TESTING LABORATORY. WATER SHALL BE DRAWN FROM THE SYSTEM AT A POINT FURTHEST FROM THE WATER ENTRANCE TO THE BUILDING. A CERTIFIED TEST REPORT OF THESE TESTS RESULTS INDICATING SATISFACTORY COLIFORM COUNT, COLOR AND CHLORINE RESIDUAL SHALL BE PRESENTED TO THE ARCHITECT AND OWNER WHEN THE WATER SUPPLY PIPING SYSTEM IS SUBSTANTIALLY COMPLETED DURING CONSTRUCTION. ANOTHER SIMILAR TEST SHALL BE PERFORMED AT THE TIME OF ISSUANCE OF THE CERTIFICATE OF OCCUPANCY WITH ANOTHER CERTIFIED TEST REPORT PRESENTED TO THE ARCHITECT AND OWNER AT THAT TIME.
30. FEDERAL LAW MANDATES AS OF JANUARY 4, 2014 THE WETTED SURFACE OF EVERY PIPE, FIXTURE AND FITTING INSTALLED IN POTABLE WATER APPLICATIONS SHALL NOT CONTAIN MORE THAN 0.25% LEAD BY WEIGHT. SOLDER AND FLUX SHALL NOT CONTAIN MORE THAN 0.2% LEAD. NON-COMPLIANCE MAY RESULT IN FINES, INSTALLED PRODUCT REMOVAL COSTS, LAWSUITS BY PRIVATE PARTIES OR GOVERNMENT AGENCY.
31. CONTRACTOR SHALL GUARANTEE ALL MATERIALS & WORKMANSHIP FREE FROM DEFECTS FOR A PERIOD OF NOT LESS THAN ONE (1) YEAR FROM DATE OF ACCEPTANCE. CORRECTION OF ANY DEFECTS SHALL BE COMPLETED WITHOUT ADDITIONAL CHARGE AND SHALL INCLUDE REPLACEMENT OR REPAIR OF ANY OTHER PARTS OF THE INSTALLATION WHICH MAY HAVE BEEN DAMAGED THEREBY.
32. CONTRACTOR TO VERIFY ALL EXISTING CONDITIONS PRIOR TO BID AND INSTALLATION. INFORM THE ENGINEER OF RECORD OF ANY DISCREPANCY BETWEEN THE DOCUMENTS AND THESE CONDITIONS AND HE SHALL INCLUDE IN HIS BID TO CORRECT THE SAME AS DIRECTED. THE ENGINEER AND THE ARCHITECT ARE NOT RESPONSIBLE FOR ANY ADDITIONAL COSTS RESULTING FROM VERIFIABLE EXISTING CONDITIONS DISCOVERED AFTER THE CONTRACT HAS BEEN AWARDED.
33. CONTRACTOR SHALL KEEP AS-BUILTS AND SUBMIT TO THE ENGINEER OF RECORD FOR REVIEW. ALL CHANGES SHALL BE FORWARDED A MINIMUM OF (2) WEEKS PRIOR TO FINAL INSPECTION. ANY EXPENSES, SUCH AS REVISIONS OR AS-BUILTS NECESSARY FOR FINAL C.O. SHALL BE AT THE EXPENSE OF THE OWNER.

REVISIONS

1.
2.
3.
4.
5.
6.
7.
8.
9.
10.

ALL IDEAS, DESIGNS, ARRANGEMENTS, AND PLANS INDICATED OR REPRESENTED BY THIS DRAWING ARE OWNED BY AND PROPERTY OF THIS OFFICE, AND WHERE CREATED, EVOLVED, AND DEVELOPED FOR USE ON, AND IN CONNECTION WITH THE SPECIFIED PROJECT. NONE OF SUCH IDEAS, DESIGNS, ARRANGEMENTS, AND PLANS SHALL BE USED BY, OR DISCLOSED TO ANY PERSON, FIRM, OR CORPORATION FOR ANY PURPOSE WITHOUT WRITTEN PERMISSION OF RWB / LINARES ARCHITECTURE, INC.

LIFE FELLOWSHIP
11401 WEST SAMPLE ROAD
CORAL SPRINGS, FL. 33065

1600 SOUTH DIXIE HWY., SUITE 400
BOCA RATON, FLORIDA 33432
PHONE 561-391-0081 FAX 561-391-0085
EMAIL mail@rwb-arch.com

RWB Linares ARCHITECTURE

PROJECT # 16024
DATE 05-20-16
SHEET #

P2.2

JUAN C. LINARES

AA26000640

CHECK SET: 05/20/16

PROGRESS OR CHECK SETS, BY THEIR NATURE, MAY BE INCOMPLETE AND ARE NOT TO BE USED FOR BIDDING OR CONSTRUCTION. CONTRACTOR RECOGNIZES HIS SOLE RESPONSIBILITY TO INCLUDE ALL CONTINGENCIES FOR DESIGN AND INSTALLATION TO MEET THE PROJECT REQUIREMENTS IN ANY PRICING EXERCISE. THE DESIGN OF THESE PLANS ARE NOT FINAL UNTIL PERMIT SETS ARE ISSUED.

PRIOR TO SUBMITTING THE BID, THE CONTRACTOR SHALL FIELD VERIFY ALL EXISTING CONDITIONS AND INFORM THE ARCHITECT AND THE ENGINEER OF ANY DISCREPANCY BETWEEN THESE DOCUMENTS AND THE EXISTING CONDITIONS AND SHALL INCLUDE IN THE BID TO CORRECT THE SAME AS DIRECTED.
THE ENGINEER AND THE ARCHITECT, ARE NOT RESPONSIBLE FOR ANY ADDITIONAL COSTS RESULTING FROM VERIFIABLE EXISTING CONDITIONS DISCOVERED AFTER CONTRACT HAS BEEN AWARDED.
NO CHANGES SHALL BE MADE TO THESE PLANS WITHOUT PRIOR APPROVAL FROM THE ENGINEER OF RECORD. ALL CHANGES SHALL BE SUBMITTED FOR REVIEW PRIOR TO INSTALLATION.
NOT FOR BID UNTIL PERMIT HAS BEEN ISSUED.

CA. LIC. No. 31328

Associated Professional Design
Consulting Engineers
900 NE SPANISH RIVER BLVD. SUITE 203, BOCA RATON, FLORIDA 33431
PHONE: 561.419.8977; INFO@APD-ENGINEERING.COM
MARTIN WHITELOCKE, P.E., FLORIDA LICENCE No. 53899