GENERAL STRUCTURAL NOTES

DESIGN CRITERIA

D1 ALL WORK SHALL CONFORM TO AT LEAST THE MINIMUM STANDARDS OF THE FLORIDA BUILDING CODE, 5TH EDITION, 2014.

D2 DESIGN LOADS PER FLORIDA BLDG. CODE,
REFER TO SHEET S1.1 FOR GRAVITY LOADS (DL & LL)
WIND DESIGN PER ASCE 7-10. EXPOSURE C, ENCLOSED BLDG.

MAIN BLDG.:
V(ult.)=170 MPH
V(all.)=132 MPH
RISK CATEGORY= II
qh(ult.)=55.3 PSF
qh(all.)=33.2 PSF
Kd=0.85
a=6'-0"

D3 FOUNDATION DESIGN VALUES: 2500 PSF
PER GEOTECHNICAL REPORT AS PREPARED BY:
GFA INTERNATIONAL
DATED: MAY 19th, 2016

D4 TO THE BEST OF THE ENGINEER'S KNOWLEDGE. THE STRUCTURAL PLANS AND SPECIFICATIONS HAVE BEEN DESIGNED IN ACCORDANCE WITH THE FLORIDA BUILDING CODE LATEST EDITION.

GENERAL

G1 PREPARATION OF THE STRUCTURAL DOCUMENTS ASSUMES THE GENERAL CONTRACTOR HAS A MINIMUM OF 5 YEARS EXPERIENCE IN SIMILAR TYPE METHOD OF CONSTRUCTION. PRIOR TO START OF CONSTRUCTION, ANY NOTES OR DETAILS THAT ARE NOT FULLY UNDERSTOOD SHALL BE BROUGHT TO THE A/E FIRM IN WRITING FOR CLARIFICATION.

G2 THE GENERAL CONTRACTOR SHALL REVIEW AND DETERMINE THAT DIMENSIONS ARE COORDINATED BETWEEN ARCHITECTURAL AND STRUCTURAL DRAWINGS PRIOR TO FABRICATION OR START OF CONSTRUCTION.

G3 THE GENERAL CONTRACTOR SHALL PROVIDE ALL MEASURES NECESSARY TO PROTECT THE STRUCTURE, THE WORK PERSONS, AND OTHER PEOPLE DURING CONSTRUCTION. HE SHALL SUPERVISE AND DIRECT THE WORK AND BE RESPONSIBLE FOR ALL CONSTRUCTION.

G4 NO STRUCTURAL MEMBER SHALL BE CUT, NOTCHED OR OTHERWISE REDUCED IN STRENGTH.

G5 THE GENERAL CONTRACTOR SHALL COORDINATE ARCHITECTURAL, MECHANICAL, AND ELECTRICAL DRAWINGS FOR ANCHORED, EMBEDDED, SUPPORTED ITEMS WHICH AFFECT THE STRUCTURAL DRAWINGS AND NOTIFY THE ARCHITECT/ENGINEER OF ANY DISCREPANCIES.

G6 ATTACHMENT OF GLAZING AND DOORS TO BE PER DADE COUNTY - NOA.

SLAB ON GRADE

SG1 UNLESS NOTED OTHERWISE IN THE GEOTECHNICAL REPORT REFERENCED ABOVE COMPACT INTERIOR FILL TO 95% OF MODIFIED PROCTOR MAXIMUM DRY DENSITY (ASTM D1557). SOIL COMPACTION SHALL BE FIELD CONTROLLED BY REPRESENTATIVE TECHNICIAN OF QUALIFIED LABORATORY. EACH LAYER OF FILL SHALL NOT EXCEED 12" THICK AND SHALL BE COMPACTED PRIOR TO PLACEMENT OF NEXT LAYER.

SG2 MINIMUM PLACEMENT OF CONTROL JOINTS SHALL BE AS SET IN THE TABLE BELOW. JOINTS OCCUR IN EACH DIRECTION.

SLAB THK IN.	COLUMN SPACING (FT.)			
	15' OR LESS	15'-1" TO 32'-0"	32'-1" TO 48'-0"	48'-1" TO 60'-0"
4"	AT COL. GRID	AT COL. GRID & 1/2 WAY BTWN (2 EQ)	AT COL. GRID & @ 1/3 POINTS (3 EQ.)	AT COL. GRID & @ 1/4 POINTS (4 EQ.)
5"	AT COL. GRID	AT COL. GRID & 1/2 WAY BTWN (2 EQ)	AT COL. GRID & 1/2 WAY BTWN (2 EQ)	AT COL. GRID & @ 1/3 POINTS (3 EQ.)
6"	AT COL. GRID	AT COL. GRID & 1/2 WAY BTWN (2 EQ)	AT COL. GRID & 1/2 WAY BTWN (2 EQ)	AT COL. GRID & @ 1/3 POINTS (3 EQ.)

CONCRETE AND REINFORCING

C1 CONCRETE WORK SHALL CONFORM TO ACI CODE REQUIREMENTS FOR REINFORCED CONCRETE (ACI 318-08)

C2 ALL CONCRETE SHALL HAVE A MINIMUM 28 DAY STRENGTH & PROPERTIES AS FOLLOWS:

		SLUMP	MAX. WATER/CMT
FOUNDATIONS SLAB ON GRADE	3000 PSI	6±1"	0.54
BEAMS & COLS	4000 PSI	5±1"	0.54
FILLED CELLS	3000 PSI	9±1"	0.62

C3 CONCRETE MIX DESIGN SUBMITTALS MUST INCLUDE THE AREA IN WHICH THE CONCRETE IS TO BE PLACED (e.g. FOUNDATIONS, SLAB-ON-GRADE, FILLED CELLS, COLUMNS, etc.). FAILURE TO DO SO WILL CAUSE DELAY AND/OR REJECTION OF SUBMITTALS.

C4 REBARS SHALL CONFORM TO ASTM-615 GRADE 60. WELDED WIRE FABRIC SHALL CONFORM TO ASTM A-185.

C5 MIMIMUM COVER FOR REINFORCING SHALL BE AS FOLLOWS UNLESS OTHERWISE NOTED.
FOOTINGS 3"
SLABS ON GRADE 1 1/2" FROM TOP
BEAMS & COLS 1 1/2" (ON TIES)

C6 SPLICES AND ANCHORAGE OF REINFORCING SHALL BE AS FOLLOWS UNLESS OTHERWISE NOTED.
WELDED WIRE FABRIC 6"
ALL OTHER 36 DIA. (12" MIN)

C7 REINFORCEMENT IN WALLS, FOOTINGS AND BEAMS SHALL BE CONTINUOUS AND LAPPED AS SHOWN ON NOTE M11. HOOK AND LAP ALL CORNER AND INTERSECTING BARS. (SEE TYPICAL DETAILS)

C8 TERMINATE ALL DISCONTINUED ELEVATED SLAB TOP BARS WITH A 180 DEGREE STANDARD HOOK UNLESS OTHERWISE NOTED.

C9 CONTINUOUS TOP BARS SHALL BE SPLICED AT MIDSPAN. CONTINUOUS BOTTOM BARS SHALL BE SPLICED AT CENTER-LINE OF SUPPORTS (OR AS SHOWN ON TYPICAL DETAILS).

C10 AT CHANGES IN DIRECTION OF CONCRETE WALLS, STRIP FOOTINGS AND GRADE BEAMS PROVIDE CORNER BARS AT SAME SIZE AND SPACING AS HORIZONTAL BARS. (REFER TO B/S4.0)

MASONRY

M1 MASONRY CONSTRUCTION SHALL CONFORM TO ACI STANDARD BUILDING CODE REQUIREMENTS FOR CONCRETE MASONRY STRUCTURES (ACI 530-05/ASCE 5-05/TMS 402-05) , SPECIFICATIONS FOR MASONRY STRUCTURES (ACI 530.1-05 /ASCE 6-05/TMS 602-05) ASTM C476, ASTM C1019, AND NCMA TEK 107.

M2 CONCRETE BLOCKS SHALL CONFORM TO ASTM C-90. (f'm = 1500 PSI) (1900 PSI ON THE NET AREA)

M3 MORTAR SHALL COMPLY WITH ASTM C270, TYPE M OR S. (COMPRESSIVE STRENGTH = 2500 PSI AND 1800 PSI, RESPECTIVELY. SITE TESTED MORTAR CUBES SHALL ACHIEVE A MINIMUM OF 80% OF THE DESIGN COMPRESSIVE STRENGTH)

M4 BLOCK SHALL NOT BE MOISTENED BEFORE GROUTING.

M5 ALL MASONRY CROSS WEBS SHALL BE FULLY BEDDED IN MORTAR AROUND CELLS TO BE GROUTED.

M6 THE MINIMUM CONTINUOUS UNOBSTRUCTED CELL AREA IN CELL TO RECEIVE GROUT MUST BE NOT LESS THAN 2"x3". MORTAR FINS MUST BE REMOVED AS BLOCK PLACEMENT PROCEEDS. MORTAR DROPPINGS MUST BE KEPT OUT OF CELLS WHICH ARE TO BE GROUTED.

M7 REINFORCE WALLS WITH LADDER TYPE (ASTM A-82, #9 GAGE WIRE) REINFORCEMENT EQUAL TO DURO-WALL IN BED JOINTS AT 16" OC UNO, MEASURED VERTICALLY PLACE PER MFR INSTR. LAP ALL HORIZONTAL JOINT REINFORCING 8", MIN. EXTEND HORIZONTAL REINFORCEMENT 4 INCHES INTO CONC. COLS. OR TIE COLS.

M8 WHERE SHOWN, CELLS OF BLOCK MASONRY SHALL BE FILLED WITH GROUT WITH MINIMUM COMPRESSIVE STRENGTH OF 3000 PSI AT 28 DAYS, AND MEET ASTM C476. GROUT SHALL BE PROVIDED BY CONCRETE SUPPLIER FROM THEIR BATCH PLANT WITH A SLUMP OF 8" TO 10". JOB SITE MIXING OF GROUT SHALL NOT BE PERMITTED. TESTING SHALL CONFORM TO ASTM C1019.

M9 GROUT FOR FILLED CELLS SHALL BE POURED OR PUMPED IN LIFTS NOT TO EXCEED FOUR (4) FEET IN HEIGHT, AND A MAX POUR OF 12 FT. FILLED CELLS SHALL BE CONSOLIDATED AT TIME OF POURING BY RODDING OR VIBRATING BETWEEN LIFTS.

M10 PROVIDE KNOCK-OUT CMU AT BASE OF EACH FILLED CELL TO ALLOW VISUAL VERIFICATION OF COMPLETE GROUT PENETRATION (FOR LIFTS OF 5'-0" OR LESS, A KNOCK-OUT AT BASE OF LIFT WILL NOT BE REQUIRED).

M11 VERTICAL REINFORCING MUST HAVE A MINIMUM CLEARANCE OF 1/2" TO INSIDE FACE. MIN VERTICAL BAR LAP = 48 x BAR DIAMETER. VERTICAL REINFORCEMENT IN WALLS SHALL BE SECURED AND LATERALLY SUPPORTED AGAINST DISPLACEMENT AT INTERVALS NOT EXCEEDING 192 x BAR DIAMETER NOR 10 FT.

M12 GROUT PLACEMENT STOPPED FOR (1) HOUR OR MORE SHOULD BE STOPPED (1 1/2") BELOW THE TOP OF THE MASONRY UNIT TO PROVIDE A KEY FOR SUBSEQUENT GROUTING.

M13 SEE FOUNDATION PLANS FOR ALL VERT REINFORCING. TYP VERTICAL REINFORCING SIZE & SPACING SHALL BE ABOVE AND BELOW ALL WALL OPENINGS.

M14 TEMPORARY BRACING AND SHORING OF WALLS TO PROVIDE STABILITY DURING CONSTRUCTION TO BE THE RESPONSIBILITY OF THE CONTRACTOR.

M15 MASONRY CONSTRUCTION MATERIALS AND INSPECTIONS SHALL CONFORM TO ALL REQUIREMENTS OF "SPECIFICATIONS FOR MASONRY STRUCTURES (ACI-ASCE 530.1)" EXCEPT AS MODIFIED BY THE REQUIREMENTS OF THESE DOCUMENTS.

M16 PROVIDE FILLED PRECAST U-LINTELS WITH (1) #5 CONT AT ALL OPENINGS WHERE CONCRETE BEAMS ARE NOT SHOWN OR NOTED. MINIMUM UNFILLED LINTEL CAPACITY = 400 lb/LF FOR SPAN INDICATED.

M17 STOPPING AND RESUMING WORK: RACK BACK 1/2-UNIT LENGTH IN EACH COURSE. DO NOT TOOTH. CLEAN EXPOSED SURFACES OF SET MASONRY WET UNITS LIGHTLY (IF REQ'D) AND REMOVE LOOSE MAS UNITS AND MORTAR PRIOR TO LAYING FRESH MASONRY.

M18 REINFORCE MASONRY OPENINGS GREATER THAN 1'-0" WIDE, WITH HORIZ JT REINF PLACED IN (2) HORIZ JT'S APPROXIMATELY 8" APART, IMMEDIATELY ABOVE THE LINTEL AND IMMEDIATELY BELOW THE SILL. EXTEND REINFORCING A MINIMUM OF 2'-0" BEYOND JAMBS OF THE OPENING EXCEPT AT CONTROL JOINTS. SEE PLAN FOR ADDITIONAL REQUIREMENTS.

M19 DO NOT APPLY UNIFORM LOADS TO MASONRY WALLS FOR (3) DAYS.

M20 DO NOT APPLY CONCENTRATED LOADS TO MASONRY WALLS FOR (7) DAYS.

M21 EXTEND ALL VERTICAL WALL REINFORCEMENT TO WITHIN 2" OF TOP OF WALL OR BEAM UNLESS NOTED OTHERWISE. TERMINATE REIN-FORCING WITH STANDARD ACI HOOK.

M22 CONTROL JOINT DETAIL

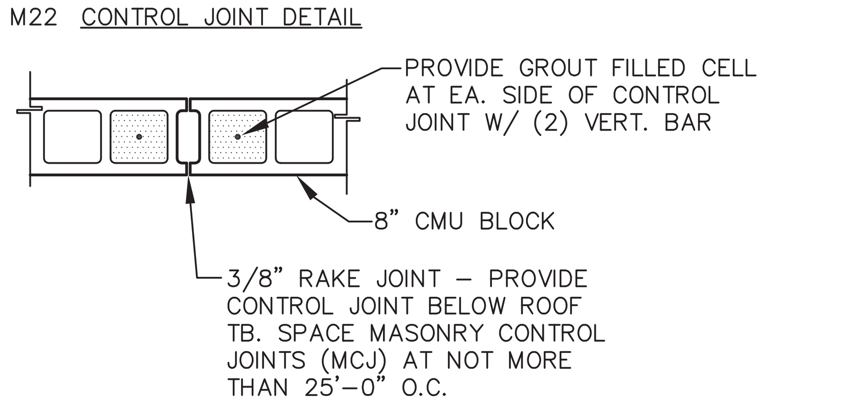

STRUCTURAL STEEL

SS1 GENERAL CONTRACTOR SHALL ENGAGE A CERTIFIED TESTING AGENCY TO PERFORM INDUSTRY STANDARD INSPECTIONS TO ENSURE CONFORMANCE WITH PLANS AND SPECIFICATIONS (IF PROVIDED). SUBMIT REPORTS TO ARCHITECT AND ENGINEER.

SS2 STEEL WORK SHALL CONFORM TO THE AISC "SPECIFICATIONS" FOR THE DESIGN, FABRICATION AND ERECTION OF STRUCTURAL STEEL BUILDINGS", LATEST EDITION.

SS3 STEEL TUBING SHALL CONFORM TO ASTM A500 GRADE B.

SS4 STRUCTURAL WF SHAPES SHALL BE TO ASTM A572 Fy=50KSI, UNLESS NOTED OTHERWISE. ALL OTHER SHAPES SHALL BE A36. ALL STRUCTURAL STEEL SHALL BE DOMESTICALLY PRODUCED.

SS5 BRACE AND MAINTAIN ALL STEEL IN ALIGNMENT UNTIL OTHER PARTS OF CONSTRUCTION NECESSARY FOR PERMANENT SUPPORT ARE COMPLETED. CONTRACTOR SHALL BE RESPONSIBLE FOR INSTALLING TEMPORARY SHORING AS REQUIRED FOR THE STABILITY OF THE STEEL FRAME UNTIL ALL STRUCTURAL ELEMENTS HAVE BEEN COMPLETED AND BUILDING IS ENCLOSED.

SS6 ALL WELDING SHALL CONFORM TO THE REQUIREMENTS OF "THE STANDARD CODE FOR WELDING IN BUILDING CONSTRUCTION" OF THE AMERICAN WELDING SOCIETY. WELDING ELECTRODES SHALL BE E70XX-LOW HYDROGEN FOR SHIELD AND METAL ARC WELDING.

SS7 GROUT FOR COLUMN BASE PLATES AND PRESET BEARING PLATES SHALL BE NON-SHRINK, NON-METALLIC GROUT. (5000 PSI MIN)

SS8 SUBMIT SHOP DRAWINGS INDICATING ALL SHOP AND ERECTION DETAILS INCLUDING PROFILES, SIZES, SPACING AND LOCATIONS OF STRUCTURAL MEMBERS, CONNECTION ATTACHMENTS, FASTENERS, LOADS AND TOLERANCES.

SS9 ALL WELDED CONN. SHALL BE 1/4" FILLET ALL AROUND, UNO. ALL BOLTED CONN. SHALL BE 3/4"ø A325 BOLTS, UNO.

SS10 STEEL PAN STAIRS SHALL BE DESIGNED BY THE FABRICATOR AND SHOP DRAWINGS SHALL BE SIGNED AND SEALED BY AN ENGINEER REGISTERED IN THE SAME STATE AS PROJECT LOCATION. DESIGN FOR 100 PSF LIVE LOAD.

SS11 ALL STEEL EXPOSED TO WEATHER SHALL HAVE ZINC RICH PRIMER

STRUCTURAL METAL STUDS

SMS1. METAL STUD VERTICAL FRAMING SIZES TO BE PER SECTIONS. MAX SPACING TO BE 24" O.C.

SMS2. SEE SHEETS S3.0 AND S3.1 FOR SHEATHING REQUIREMENTS.

SMS3. PROVIDE MECHANICAL BRIDGING AT 4'-0" O.C. VERTICAL SPACING. -REFER TO STUD MFR'S STANDARD DETAILS FOR TYPICAL BRIDGING TYPES AND INSTALLATION METHODS.

SMS4. MINIMUM BACK- TO BACK STUD CONNECTIONS TO BE WITH (2) # 10 TEKS @ 16" O.C. VERT. SPACING.

SMS5. CONNECTING CLIP ANGLE GAGE TO MATCH HEAVIEST GAGE OF CONNECTING MATERIAL U.N.O..

METAL DECKING

MD1 ROOF DECKING SHALL CONFORM TO THE REFQUIREMENTS OF THE STEEL DECK INSTITUTE AND SHALL BE 1.5" TYPE "B" GALV. G90, METAL ROOF DECK. REFER TO ROOF PLAN FOR DECK GAGE.

MD2 UNLESS OTHERWISE NOTED ON ROOF FRAMING PLAN, ATTACH METAL ROOF DECK USING 5/8"ø PUDDLE WELDS IN ACCORDANCE WITH SDI PATTERN 36/7 AT ALL SUPPORTS. USE (9) #10 TEKS SIDELAP SCREW FASTENERS, EQUALLY SPACED BETWEEN SUPPORTS.

MD3 FRAME ALL ROOF OPENINGS LARGER THAN 12 SQUARE INCHES WITH STEEL FRAMING. (L 2 1/2"x2 1/2"x1/4" TYPICAL)

EXPANSION ANCHORS

EA1. CARBON STEEL EXPANSION ANCHORS SHALL HAVE A ONE PIECE ANCHOR BODY WITH A LENGTH IDENTIFICATION CODE. THE ANCHORS SHALL HAVE AN EXPANSION MECHANISM WHICH CONSISTS OF A PAIR OF INTERLOCKING INDEPENDENT WEDGES. CARBON STEEL COMPONENTS SHALL BE PLATED ACCORDING TO ASTM SPECIFICATION B 633. EXPANSION ANCHORS MUST MEET THE DESCRIPTION IN FEDERAL SPECIFICATION FF-S-325 FOR CONCRETE EXPANSION ANCHORS.

EA2. EXPANSION ANCHORS SHALL BE INSTALLED PER MANUFACTURERS RECOMMENDATIONS.

EA3. EXPANSION ANCHORS SHALL HAVE A MINIMUM ULTIMATE TENSILE AND SHEAR LOADS (LBS) AS SHOWN IN SCHEDULE BELOW:

DIA.	EMBEDMENT (IN)	f'c=3,000 psi TENSILE	f'c=3,000 psi SHEAR	f'c=4,000 psi TENSILE	f'c=4,000 psi SHEAR	INSTALLATION TORQUE (ft/lbs)
1/2"	2 1/4"	4925	7360	5450	7360	65
	3 1/2"	8000	9200	9000	9200	
	6"	8650	9200	9500	9200	
5/8"	2 3/4"	7000	11500	8000	11500	110
	4"	10670	14200	12350	14200	
	7"	13000	14200	14000	14200	
3/4"	3 1/4"	8700	15500	10000	15500	235
	4 3/4"	15500	19200	18000	19200	
	8"	18500	19200	22000	19200	
1"	4 1/2"	15200	28500	17500	30500	450
	6"	22500	34500	26500	34500	
	9"	28750	34500	32500	34500	

STEEL JOISTS

SJ1 GENERAL CONTRACTOR SHALL ENGAGE A CERTIFIED TESTING AGENCY TO PERFORM INDUSTRY STANDARD INSPECTIONS TO ENSURE CONFORMANCE WITH PLANS AND SPECIFICATIONS (IF PROVIDED). SUBMIT REPORTS TO ARCHITECT AND ENGINEER.

SJ2 ALL DESIGN, FABRICATION AND ERECTION OF STEEL JOISTS AND BRIDGING SHALL BE IN STRICT ACCORDANCE WITH THE CURRENT SPECIFICATIONS OF STEEL JOIST INSTITUTE AND RECOMMENDED CODE OF STANDARD PRACTICE.

SJ3 THE ENDS OF ALL BRIDGING LINES TERMINATING AT WALLS OR BEAMS SHALL BE ANCHORED TO THE WALL OR BEAM.

SJ4 ALL STEEL JOISTS ARE TO BE CAMBERED AS SPECIFIED BY SJI.

SJ5 PROVIDE BOTTOM AND/OR TOP CHORD EXTENSIONS AS SHOWN ON DRAWINGS.

SJ6 UNLESS NOTED OTHERWISE, MINIMUM JOIST BEARING SHALL BE 2 1/2" ON A STEEL MEMBER OR EMBED PLATE.

SJ7 BRIDGING SHALL BE FURNISHED AND INSTALLED TO MEET THE SIZE AND SPACING REQUIREMENTS OF THE SJI STANDARD SPECIFICATIONS FOR OPEN WEB STEEL JOISTS. ALL BRIDGING AND BRIDGING ANCHORS SHALL BE COMPLETELY INSTALLED BEFORE CONSTRUCTION LOADS ARE PLACED ON THE JOISTS. THE LAST TWO JOIST SPACES IN A LINE OF BRIDGING SHALL BE "X" TYPE. ALL JOISTS 40'-0" OR LONGER REQUIRE A ROW OF BOLTED BRIDGING TO BE IN PLACE BEFORE SLACKENING OF HOISTING LINES. OTHER JOISTS REQUIRE SIMILAR BRIDGING CONSULT LATEST SJI SPECIFICATIONS.

SJ8 ALL HANGERS TO SUPPORT MECHANICAL EQUIPMENT, ETC. TO BE SUPPORTED BY THE BOTTOM CHORD OF JOISTS SHALL BE LOCATED AT THE PANEL POINT OF THE JOIST. IF HANGERS MUST BE LOCATED BETWEEN PANEL POINTS, PROVIDE JOIST STIFFENERS. L1 1/2 x 1 1/2 x 3/16 JOIST STIFFENERS MUST BE INSTALLED FROM HANGER TO OPPOSITE CHORD PANEL POINT BEFORE LOAD IS APPLIED.

SJ9 CONTRACTOR TO FURNISH BAR JOIST CERTIFICATIONS SIGNED AND SEALED BY AN ENGINEER REGISTERED IN THE SAME STATE AS THE PROJECT LOCATION.

SJ10 FOR NET UPLIFT SEE NET UPLIFT PLAN ON SHEET S2.1 PROVIDE UPLIFT BRIDGING.

SJ11 ALL SPRINKLER AND ROOF DRAIN PIPES MUST BE SUPPORTED NO FURTHER THAN 3" FROM THE JOIST TOP CHORD PANEL POINTS. THIS WILL BE STRICTLY ENFORCED. WHEN PIPES ARE PERPENDICULAR TO JOISTS, HANGERS SHALL BE PROVIDED EVERY OTHER JOIST (APPROX 10'-0" OC). WHEN PIPES ARE PARALLEL TO JOISTS, TWO CASES EXIST. FIRST, PIPES THAT ARE 4" AND LESS MAY BE SUPPORTED BY A SINGLE JOIST WITH HANGERS NOT TO EXCEED 10'-0" OC. SECOND, PIPES THAT ARE LARGER THAN 4" MUST BE CENTERED BETWEEN TWO JOISTS AND SUPPORTED FROM L4x4x5/16 ANGLE BEARING ON JOIST TOP CHORD PANEL POINTS WITH SPACING NOT TO EXCEED 10'-0" OC. GENERAL CONTRACTOR SHALL COORDINATE THESE REQUIREMENTS WITH THE APPROPRIATE TRADES.

SJ12 ALL ITEMS SUSPENDED FROM JOISTS (i.e. CATWALKS, BALCONIES, OPERABLE PARTITIONS, etc...) SHALL BE INSTALLED AFTER DEAD LOAD HAS BEEN APPLIED.

JOIST BRIDGING NOTES:

JB1 BRIDGING STANDARD WITH THE MANUFACTURER AND COMPLYING WITH THE STEEL JOIST INSTITUTE STANDARD SPECIFICATIONS LOAD TABLES & WEIGHT TABLES OF THE LATEST ADOPTION SHALL BE USED FOR BRIDGING ALL JOISTS FURNISHED BY THE MANUFACTURER. POSITIVE ANCHORAGE SHALL BE PROVIDED AT THE ENDS OF EACH BRIDGING ROW AT BOTH TOP AND BOTTOM CHORDS.

JB2 FOR "K" AND "LH" SERIES JOISTS HORIZONTAL BRIDGING IS RECOMMENDED FOR SPANS UP TO AND INCLUDING 60 FEET EXCEPT WHERE THE STEEL JOIST INSTITUTE STANDARD SPEC LOAD TABLES & WEIGHT TABLES REQUIRE BOLTED DIAGONAL BRIDGING FOR ERECTION STABILITY.

JB3 "LH" AND "DLH" SERIES JOISTS EXCEEDING 60 FEET IN LENGTH SHALL HAVE BOLTED DIAGONAL BRIDGING FOR ALL ROWS.

JB4 REFER TO SJI SECTION 6 IN THE "K" SERIES SPECIFICATIONS AND SECTION 105 IN THE "LH" AND "DLH" SERIES SPECIFICATIONS FOR ERECTION STABILITY REQUIREMENTS

JB5 REFER TO APPENDIX E FOR OSHA STEEL JOIST ERECTION STABILITY REQUIREMENTS.

JB6 HORIZONTAL BRIDGING SHALL CONSISTS OF CONTINUOUS HORIZONTAL STEEL MEMBERS. THE l/r RATIO FOR HORIZONTAL BRIDGING SHALL NOT EXCEED 300.

JB7 DIAGONAL CROSS BRIDGING CONSISTING OF ANGLES OR OTHER SHAPES CONNECTED TO THE TOP AND BOTTOM CHORDS, OF "K", "LH", AND "DLH" SERIES JOISTS SHALL BE USED WHEN REQUIRED BY THE APPLICABLE STEEL JOIST INSTITUTE STANDARD SPECIFCATIONS LOAD TABLES AND WEIGHT TABLES OF LATEST ADOPTION.

JB8 DIAGONAL BRIDGING, WHEN USED, SHALL HAVE AN l/r RATIO < 200.

JB9 WHEN BOLTED DIAGONAL ERECTION BRIDGING IS REQUIRED, THE FOLLOWING SHALL APPLY:
A. THE BRIDGING SHALL BE INDICATED ON THE JOIST LAYOUT PLAN
B. THE JOIST LAYOUT PLAN SHALL BE THE EXCLUSIVE INDICATOR FOR THE PROPER PLACEMENT OF THIS BRIDGING.
C. SHOP INSTALLED BRIDGING CLIPS, OR FUNCTIONAL EQUIVALENT SHALL BE PROVIDED WHERE THE BRIDGING BOLTS TO THE STEEL JOISTS.
D. WHEN TWO PIECES OF BRIDGING ARE ATTACHED TO THE STEEL JOIST BY A COMMON BOLT, THE NUT THAT SECURES THE FIRST PIECE OF BRIDGING SHALL NOT BE REMOVED FROM THE BOLT FOR THE ATTACHMENT OF THE SECOND PIECE.
E. BRIDGING ATTACHMENTS SHALL NOT PROTRUDE ABOVE THE TOP CHORD OF THE STEEL JOISTS.

JB10 PROVIDE UPLIFT BRIDGING AT FIRST BOTTOM CHORD PANEL POINT EACH END OF JOIST. REFER TO SECTION B/S4 FOR UPLIFT BRIDGING CONNECTION DETAILS

JB11 DO NOT WELD BRIDGING TO JOIST WEB MEMBERS. DO NOT HANG ANY MECHANICAL, ELECTRICAL, PLUMBING, ETC FROM BRIDGING

JB12 BRIDGING LEGEND FOR PLAN BELOW:
(A) HORIZONTAL BRIDGING ATTACHED TO TOP AND BOTTOM CHORD
(B) BOLTED OR WELDED CROSS BRIDGING AS SHOWN
(C) SINGLE LINE HORIZONTAL UPLIFT BRIDGING

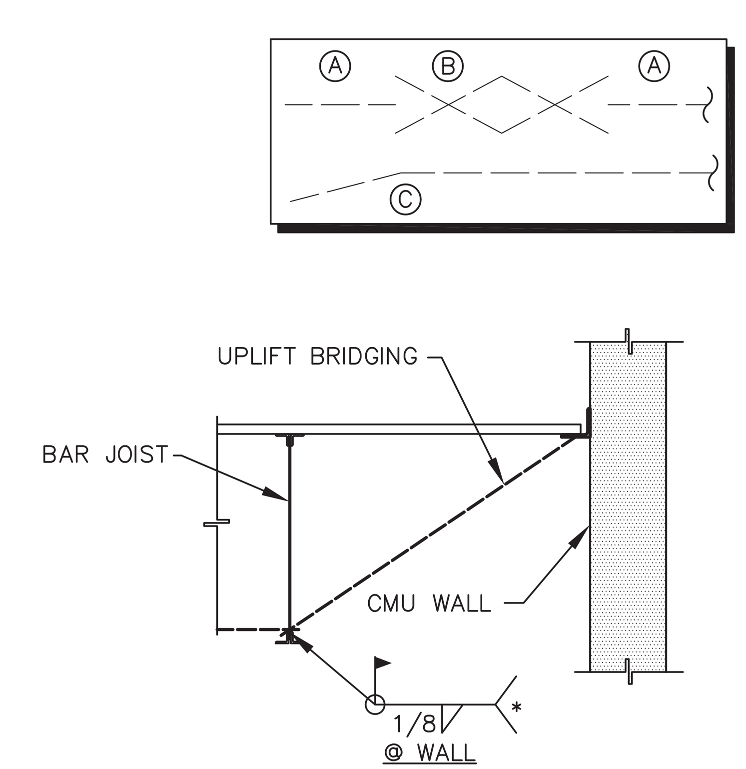

*WELD ALL POINTS OF CONTACT

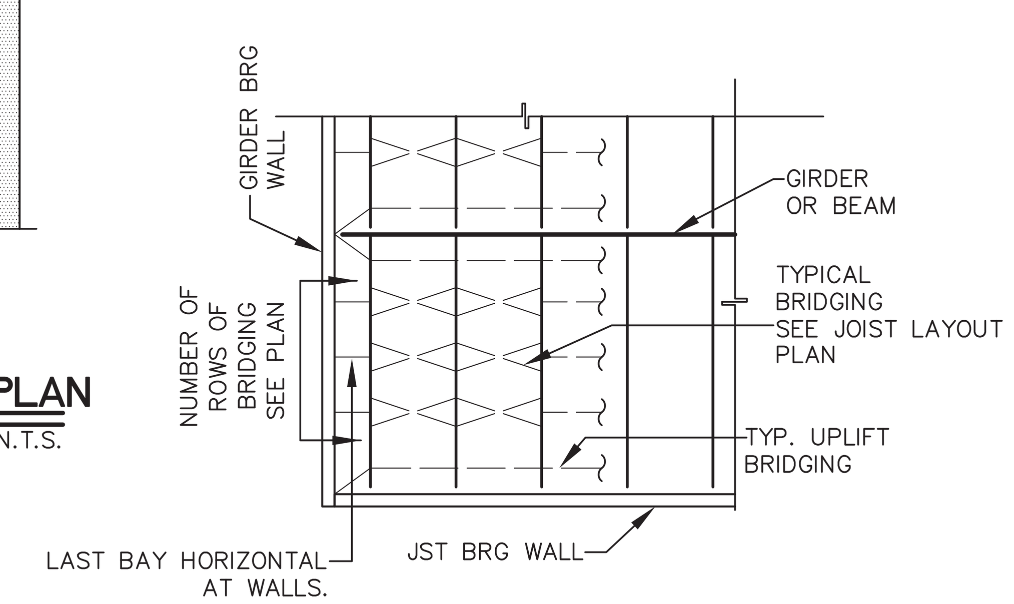

A BRIDGING DETAILS AND PLAN
SCALE: N.T.S.

STRUCTURAL ABBREVIATIONS

AB	ANCHOR BOLT
ABV	ABOVE
A.C.I.	AMERICAN CONCRETE INSTITUTE
ADD'L	ADDITIONAL
AFF	ABOVE FINISH FLOOR
AGGR	AGGREGATE
A.I.S.C.	AMERICAN INSTITUTE OF STEEL CONSTRUCTION
A.I.S.I.	AMERICAN IRON AND STEEL INSTITUTE
AL	ALUMINUM
ALT	ALTERNATE
ARCH	ARCHITECT(URAL)
A.S.T.M.	AMERICAN SOCIETY OF TESTING MATERIALS
A.W.S.	AMERICAN WELDING SOCIETY
B/	BOTTOM OF
BB	BOND BEAM
BLDG	BUILDING
BLW	BELOW
BM	BEAM
BOT	BOTTOM
BP	BASE PLATE
BRDG	BRIDGING
BRG	BEARING
BRK	BRICK
BS	BOTH SIDES
BTJ	BOLTED TIE JOIST
BTWN	BETWEEN
C/C	CENTER TO CENTER
CANT	CANTILEVER
CB	CONCRETE BEAM
CC	CONCRETE COL
CIP	CAST IN PLACE
CJ	CONSTRUCTION JOINT OR CONTROL JOINT
CL	CENTERLINE
CLR	CLEAR(ANCE)
CM	CONCRETE MASONRY
CMU	CONCRETE MASONRY UNIT
COL	COLUMN
CONC	CONCRETE
CONN	CONNECTION
CONT	CONTINUOUS
CONTR	CONTRACTOR
CSK	COUNTER SINK
CTR	CENTER
CTR'D	CENTERED
DIA	DIAMETER
DL	DEAD LOAD
DN	DOWN
DTL	DETAIL
DWG	DRAWING
DWL	DOWEL
EA	EACH
EE	EACH END
EF	EACH FACE
EJ	EXPANSION JOINT
ENG	ENGINEER
EL	ELEVATION
EQ	EQUAL
EQ SP	EQUAL SPACE(S) (ING)
ES	EACH SIDE
EW	EACH WAY
EXT	EXTERIOR
F/	FACE OF
FD	FLOOR DRAIN
FDN	FOUNDATION
FIN	FINISH
FL	FLOOR
FLG	FLANGE
FS	FAR SIDE
FT	FOOT
FTG	FOOTING
GA	GAGE, GAUGE
GALV	GALVANIZE
GB	GRADE BEAM
GC	GENERAL CONTRACTOR
GLB	GLU-LAM BEAM
GR	GRADE
HC	HOLLOW CORE
HK	HOOK
HORIZ	HORIZONTAL
HP	HIGH POINT
HS	HEADED STUD
ID	INSIDE DIAMETER
IF	INSIDE FACE
INT	INTERIOR
JST	JOIST
K	KIP
KO	KNOCK OUT
LG	LONG
LL	LIVE LOAD
LLH	LONG LEG HORIZONTAL
LLV	LONG LEG VERTICAL
LNTL	LINTEL
LSL	LONG SLOTTED HOLES
LONG	LONGITUDINAL
LP	LOW POINT
MAS	MASONRY
MAX	MAXIMUM
MBM	METAL BUILDING MFR
MC	MOMENT CONNECTION
MCJ	MASONRY CONTROL JT
MECH	MECHANICAL
MEZZ	MEZZANINE
MFR	MANUFACTURE(ER)
MIN	MINIMUM
MO	MASONRY OPENING
MS	METAL STUD
MTL	METAL
NS	NEAR SIDE
NTS	NOT TO SCALE
OA	OVERALL
OC	ON CENTER
OD	OUTSIDE DIA.
OF	OUTSIDE FACE
OPNG	OPENING
OPP	OPPOSITE
PAF	POWDER ACTUATED FASTENERS
PERP	PERPENDICULAR
PC	PRECAST
PL	PLATE
PLYWD	PLYWOOD
PNL	PANEL
PSF	POUNDS PER SQUARE FOOT
PSI	POUNDS PER SQUARE INCH
PTN	PARTITION
R	RADIUS
REF	REFERENCE
REINF	REINFORCE(D) (ING)
REQ	REQUIRE
REQ'D	REQUIRED
RF	ROOF
RTN	RETURN
RW	RETAINING WALL
SCH	SCHEDULE
SE	SLAB EDGE
SECT	SECTION
SHT	SHEET
SIM	SIMILAR
SJ	SAWCUT JOINT
SJI	STEEL JOIST INSTITUTE
SL	SLOPE
SP	SPACE(S)
SPECS	SPECIFICATIONS
SQ	SQUARE
SS	STAINLESS STEEL
STD	STANDARD
STL	STEEL
STR	STRENGTH
STRL	STRUCTURAL
SW	SHEAR WALL
SYMM	SYMMETRICAL
SYP	SOUTHERN YELLOW PINE
TB	TIE BEAM
T&B	TOP & BOTTOM
TC	TIE COLUMN
TDS	TURN DOWN SLAB
TEMP	TEMPERATURE
THK	THICK
THNS	THICKEN SLAB
TOP'G	TOPPING
TYP	TYPICAL
T/	TOP OF
UNO	UNLESS NOTED OTHERWISE
VERT	VERTICAL
WF	WALL FOOTING
WO	WINDOW OPENING (MASONRY)
WP	WORKING POINT
WS	WATERSTOP
WWF	WELDED WIRE FABRIC
W/	WITH

JOHNSON STRUCTURAL GROUP
E.B. #00008893
MARK JOHNSON, P.E. #51983, SECB
3500 N.W. Boca Raton Blvd. Suite #618
Boca Raton, FL. 33431
(P)(561) 982-8999 (F)(561) 982-8899
EMAIL: mark@johnsonstructural.com
WWW.JOHNSONSTRUCTURAL.COM

COPYRIGHT © 2016, JOHNSON STRUCTURAL GROUP, INC.

Architect: AA 0002541
Engineering: EB 0006884

MARK JOHNSON LICENSE NO. 51983 STATE OF FLORIDA PROFESSIONAL ENGINEER

Digitally signed by Mark Johnson, PE 51983
Date: 2016.06.15 08:43:13 -04'00'

WELLINGTON GREEN PARCEL "F"
PHASE II RETAIL "H" MODIFICATION
PETITION NO. 16-18 (2016-08 ASA 53)
2545 SOUTH STATE ROAD 7
WELLINGTON, FLORIDA 33414

Revisions of Drawings

No.	Date	Revisions

Issues of Drawings

No.	Date	Issues
1	06.15.16	100% CD - PERMIT SET

Phase:
Checked:
Drawn: N.T.S.
Drawing Title
STRUCTURAL NOTE SHEET

WDA Proj. No.: 1526-01
Owner Proj. No.:
Scale:
Sheet No.
S1.0
No. of Sheets.:

THIS DOCUMENT CONTAINS COPYRIGHTED MATERIAL AND TRADE SECRET INFORMATION BELONGING EXCLUSIVELY TO WILLIAMSON DACAR ASSOCIATES, INC. ANY UNAUTHORIZED USE, DISCLOSURE, DISSEMINATION OR DUPLICATION OF ANY OF THE INFORMATION CONTAINED HEREIN MAY RESULT IN LIABILITY UNDER APPLICABLE LAWS.