METAL STUD (50KSI) AND PLYWOOD CONNECTIONS:

1. 5/8" THK FRT PLYWOOD SHEATING. PROVIDE #8-1 5/8" S-12 ROCK ON SCREWS AT 8" O.C. ALONG STUD SPAN FOR PLYWOOD TO MTL STUD FLANGE CONN.
2. 6", 16ga. CEE MTL STUDS AT 16" O.C.
3. 3 5/8", 16ga. CEE MTL STUDS AT 16" O.C.
4. 2 1/2", 16ga. CEE MTL STUDS AT 16" O.C.
5. 16ga. CLIP ANGLE W/(3)#12 TEKS FROM CLIP TO MTL STUD WEB AND (3) 1/4"øx1-3/4" TAPCONS FROM CLIP TO CMU WALL. MAKE CLIP ANGLE FULL WIDTH/HEIGHT OF MTL STUDS. TAPCON EDGE DISTANCE 1 1/2" MIN.
6. (3)#12 TEKS FOR MTL STUD TO STUD CONN.
7. (5)#12 TEKS FORM STUD FLANGE TO STUD FLANGE AT ENDS AND EQUAL SPACING.
8. CONT. 18ga. MTL ANGLE. USE (2)#12 TEKS FROM ANGLE TO STUD CONN.
9. PROVIDE MATCHING TRACK W/ (1) #12 TEK PER FLANGE.
10. 16ga. CLIP ANGLE W/(2)#12 TEKS FROM CLIP TO MTL STUD FLANGE AND (2) 1/4"øx1-3/4" TAPCONS FROM CLIP TO TOP OF CMU WALL. MAKE CLIP ANGLE FULL WIDTH/HEIGHT OF MTL STUDS. TAPCON EDGE DISTANCE 1 1/2" MIN.
11. 16ga. CLIP ANGLE W/(4)#12 TEKS FROM CLIP TO MTL STUD WEB CONN. AND (3) 0.205"ø POWDER FASTENERS FROM CLIP TO STEEL BEAM CONN. MAKE CLIP ANGLE FULL WIDTH/HEIGHT OF MTL STUDS.
12. 16ga. CLIP ANGLE W/(2)#12 TEKS FROM CLIP TO MTL STUD WEB CONN. AND (2) 0.205"ø POWDER FASTENERS FROM CLIP TO STEEL BEAM CONN. MAKE CLIP ANGLE FULL WIDTH/HEIGHT OF MTL STUDS.
13. PROVIDE BRIDGING AT 5'-0" O.C. MAX.
14. L5x5x¼ LLV, CONTINOUS. TO PERPENDICULAR BMS: ¼" FILLET WELD FULL LENGTH, BOTH SIDES OF ANGLE.

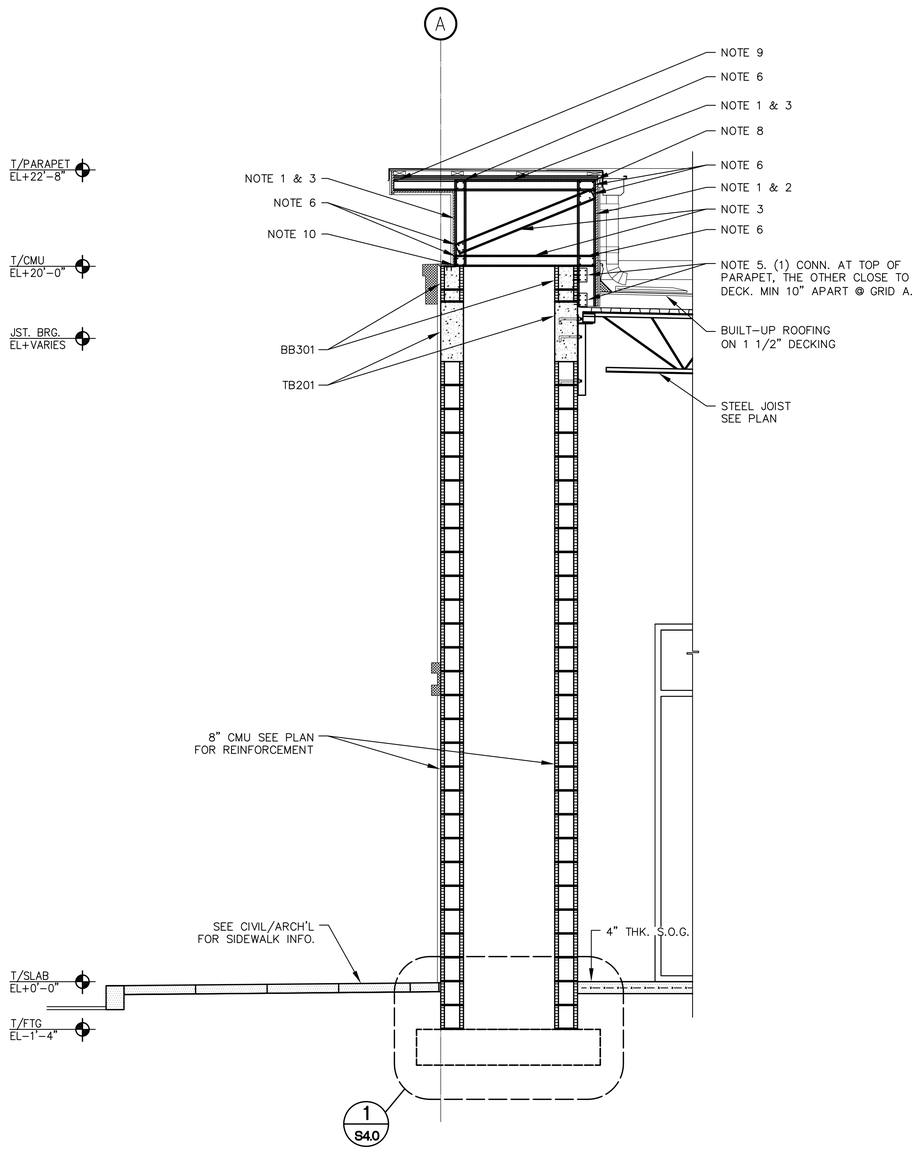

1 FRONT CANOPY WALL SECTION
SCALE: 1/2"=1'-0"

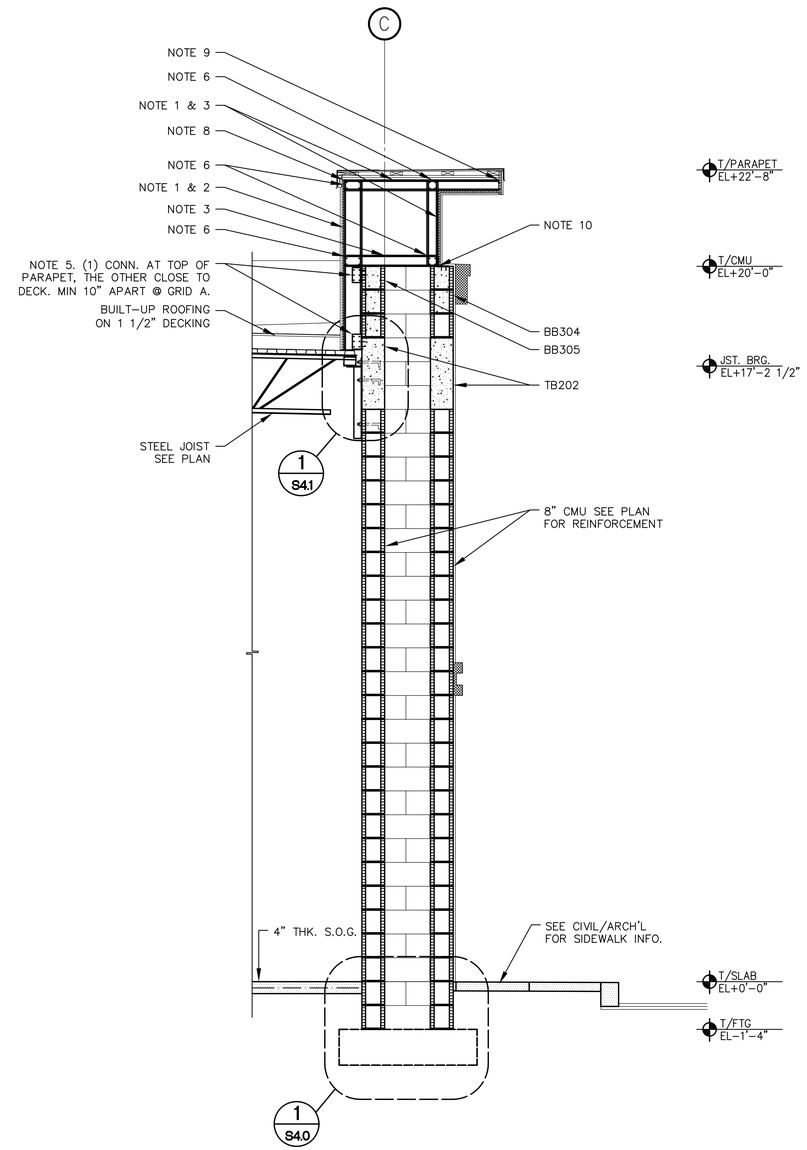

2 BACK CORNER WALL SECTION
SCALE: 1/2"=1'-0"

THIS DOCUMENT CONTAINS COPYRIGHTED MATERIAL AND TRADE SECRET INFORMATION BELONGING EXCLUSIVELY TO WELLINGTON FACILITY ASSOCIATES, INC. AND WHICH MAY NOT BE REPRODUCED, DISCLOSED, DISTRIBUTED, OR TRANSMITTED IN ANY OF THE FORMATS OTHERWISE WITHOUT PRIOR WRITTEN PERMISSION OF WFA, EXCEPT IN STRICT ACCORDANCE WITH THE LICENSE AGREEMENT UNDER APPLICABLE LAWS.

JOHNSON STRUCTURAL GROUP
E.B. #00008893
MARK JOHNSON, P.E. #51983, SECB
3500 N.W. Boca Raton Blvd. Suite #618
Boca Raton, FL. 33431
(P)(561) 982-8999 (F)(561) 982-8899
EMAIL: mark@johnsonstructural.com
WWW.JOHNSONSTRUCTURAL.COM
COPYRIGHT © 2016, JOHNSON STRUCTURAL GROUP, INC.

Architect: AA 0002541
Engineering: EB 0006884

MARK JOHNSON LICENSE NO. 51983 STATE OF FLORIDA PROFESSIONAL ENGINEER

Digitally signed by Mark Johnson, PE 51983
Date: 2016.06.29 15:34:29 -04'00'

WELLINGTON GREEN PARCEL 'F'
PHASE II RETAIL 'H' MODIFICATION
PETITION NO. 16-18 (2016-08 ASA 53)
2546 SOUTH STATE ROAD 7
WELLINGTON, FLORIDA 33414

Revisions of Drawings

No.	Date	Revisions

Issues of Drawings

No.	Date	Issues
1	06.15.16	100% CD - PERMIT SET

Phase:
Checked:
Drawn: 1/2"=1'-0"
Drawing Title
STRUCTURAL WALL SECTIONS

WDA Proj. No.: 1526-01
Owner Proj. No.:
Scale:
Sheet No.
S3.3
No. of Sheets.: