14224 OPP INC A5.0-WALL SECTIONS.DWG

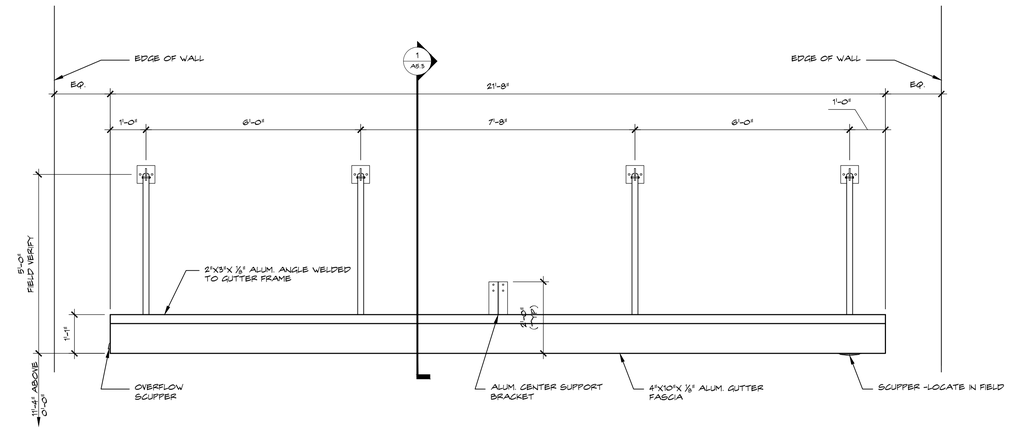

4 CANOPY ELEVATION

SCALE: 1/2" = 1'-0"

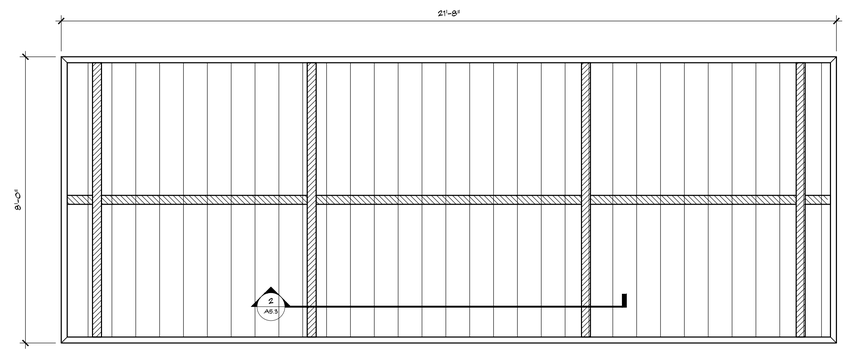

3 CANOPY PLAN

SCALE: 1/2" = 1'-0"

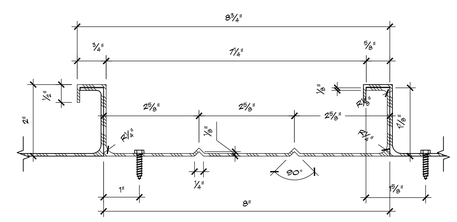

2 CANOPY DECK DETAIL

SCALE: 6" = 1'-0"

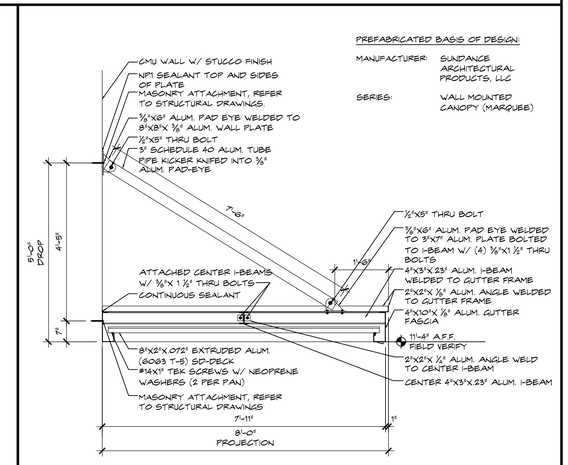

1 ENTRY CANOPY SECTION

SCALE: 1/2" = 1'-0"

207 SIXTH STREET
WEST PALM BEACH, FLORIDA 33401
ph : 561.684.6844 - gliddenspina.com
FL Lic # AA26002399

GLIDDEN SPINA + PARTNERS

Architecture - Interior Design
Keith M. Spina # AR13419

New Building For:
OPPORTUNITY INC.
EARLY LEARNING CENTER
4171 Westgate Avenue
Palm Beach County, Florida

THESE DRAWINGS ARE FOR THE EXCLUSIVE USE OF GLIDDEN SPINA + PARTNERS, INC. AND MAY NOT BE DUPLICATED, REPRODUCED OR USED IN ANY MANNER WITHOUT THE EXPRESS WRITTEN CONSENT OF GLIDDEN SPINA + PARTNERS, INC. ALL RIGHTS RESERVED.

Revisions:

Project no:	14224
Date:	09.09.16
Drawn by:	WS
Project Architect:	WC / DR

EXTERIOR DETAILS

A5.3

09.09.16 BID/PERMIT